BEZEL FREE P-CAP PANEL PC

10.1" (1280*800) Bezel-Free P-cap Panel PC, Skylake-U i3-6100U, DC 9~36V, IP65 Aluminum Front Bezel , CFast socket IEC-60945 certificated,1280*800, Brightness 500nits Viewing 85/85/85/85 Wide Temp-30~70°C No Memory, Storage and OS. *Est. Shipping Weight and Dimensions:44.4*19.2*43.5cm 7.4KG/pc*



MODEL: EGBW1010i3

FEATURES:

- 7th/6th Gen Core i7/i5/i3
- IEC-60945 Certified / DNV Compliance
- IP65 / 66 Front Panel
- -30°C Cold Start
- Fanless Design
- 3-Pin Power Input Terminal Block
- DC 9~36V Wide Range Power Input
- 1280*800 Resolution
- 500 nits LED Backlight
- Optional 1000 nits LED Backlight
- Optional to Resistive Touch



SPECIFICATIONS:

SYSTEM	
Processor	7th/6th Gen Kaby Lake-U/Skylake-U Core i7/i5/i3
System Memory	DDR4 2133 MHz SO-DIMM, up to 16 GB
External I/O Port	4 x USB 3.0
	2 x GbE LAN (I210-AT & I219LM, AMT 11.x supported)
	1 x Display Port
	1 x HDMI
	2 x RS-232
	1 x RS-232/422/485(COM1)
	1 x Audio
	1 x Power press button
	1 x 3-Pin Power Input
Storage	1 CFast Slot, Push-in/ Push-out Ejector
	1 x mSATA (full size mini-PCIe)
Operating	6th Gen CPU for Win 7 Pro/ WES7 / Win 8 / Win 10
Expansion	2 x MiniPCIe Slot
POWER REQUIREMENT	
Power Type	3-Pin Power Input Terminal Block
	DC 9~36V Wide Range Power Input
TOUCH SCREEN	
Type	10.1" P-cap USB Interface

LCD	
Display Type	10.1" TFT LCD
Max. Resolution	1280*800
Max. Color	16.1M
Luminance	500 nits
View Angle	85/85/85/85
Backlight Lifetime	30,000 hours
MECHANICAL	
Construction	Aluminum Front Bezel and Metal Case
IP Rating	Front Panel IP65/ IP66 Compliant
Mounting	VESA / Panel Mount
Dimension	TBC
ENVIRONMENT	
Operating Temp	-30~70 °C IEC-60068-2-1/2/14
Storage Temp	-30~70 °C
Humidity	10~90% @40 °C, non-condensing
EMC	FCC / CE Class A Certification CE Class B Compliant
Vibration	1.5 Grms @10~500Hz, IEC-60068-2-64

Specifications subject to change without notice, not responsible for typographical errors.

i-Tech Company LLC
TOLL FREE: (888) 483-2418 • EMAIL: info@iTechLCD.com • WEB: www.iTechLCD.com

Modified Date: 04-05-2021

MECHANICAL DRAWINGS

This is subject to change without Notice. Final Drawings Will be Provided for Approval after Order.

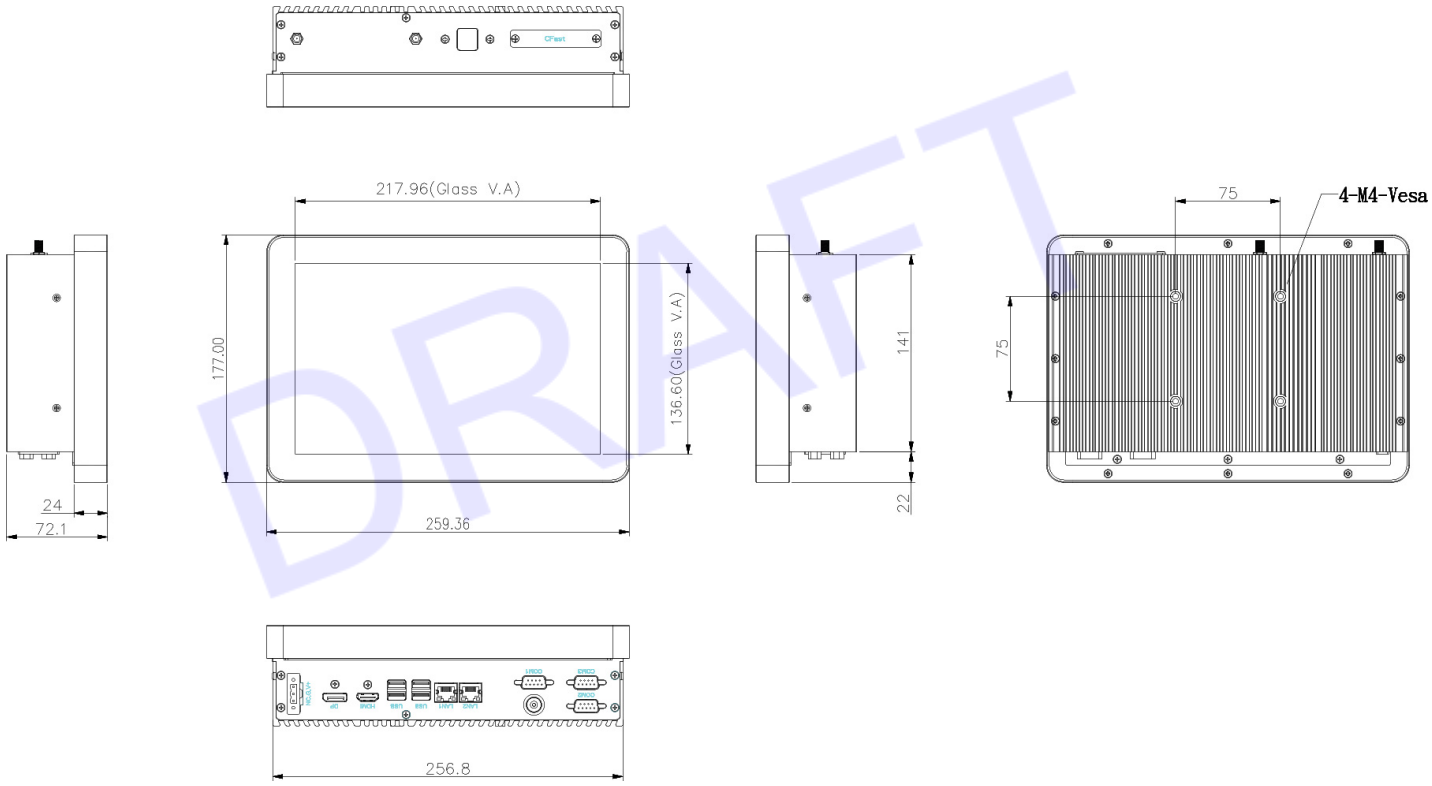

DRAFT