26"/32"/42" Multimedia Digitel Signage Kiosk
MSB Series

i-Tech Company LLC
TOLL FREE: (888) 483-2418 • EMAIL: info@iTechLCD.com • WEB: www.iTechLCD.com

Copyright Notice

Disclaimer

The information in this document is subject to change without notice. The manufacturer makes no representations or warranties with respect to the contents hereof and specifically disclaims any implied warranties of merchantability or fitness for any particular purpose. The manufacturer reserves the right to revise this publication and to make changes from time to time in the content hereof without obligation to notify any person of such revision or changes.

Trademarks

All brands and product names used for identification in this document are trademarks or registered trademarks of their respective companies.

Federal Communications Commission (FCC)

This equipment has been tested and found to comply with the limits for a Class A digital device, pursuant to Part 15 of the FCC Rules. These limits are designed to provide reasonable protection against harmful interference in a residential installation. This equipment generates, uses, and can radiate radio frequency energy and, if not installed and used in accordance with the instructions, may cause harmful interference to radio communications. However, there is no guarantee that interference will not occur in a particular installation. If this equipment does cause harmful interference to radio or television reception, which can be determined by turning the equipment off and on, the user is encouraged to try to correct the interference by one or more of the following measures:

- Reorient or relocate the receiving antenna.
- Increase the separation between the equipment and the receiver.
- Connect the equipment onto an outlet on a circuit different from that to which the receiver is connected.
- Consult the dealer or an experienced radio/TV technician for help.

Shielded interconnect cables and a shielded AC power cable must be employed with this equipment to ensure compliance with the pertinent RF emission limits governing this device. Changes or modifications not expressly approved by the system's manufacturer could void the user's authority to operate the equipment.

Declaration of conformity

This device complies with part 15 of the FCC rules. Operation is subject to the following conditions:

- This device may not cause harmful interference, and
- This device must accept any interference received, including interference that may cause undesired operation

Make sure that all of the items listed above are present. If any of the above items is missing, contact your dealer immediately.

Before getting started, read these instructions and save them for later reference.

1. To access any internal components of the system, confirm the system power is turned off and disconnected. Also, make sure all the system fans have stopped.

2. Turn off the computer before cleaning. Clean with a damp or dry cloth only. Do not spray any liquid cleaner on screen.
3. The power socket used to plug in the power cord must be located near the system and easily accessible. Do not use an outlet that connects systems that regularly switch on and off.
4. Make sure the voltage of the power source is correct before connecting the system to the power outlet.
5. If the system is sharing an extension cord with other devices, make sure the total ampere rating of the devices plugged into the extension cord does not exceed the cord's ampere rating.
6. Do not expose the power cord, power outlet or extension cord to moisture.
7. Install the system on a solid surface to prevent the system from falling over.
8. Disconnect the power cord from the system before any installation. Make sure both the system and the external devices are turned off. The sudden surge of power may ruin sensitive components. Also make sure the system is properly grounded.
9. During installation of any internal components, be sure to ground yourself to keep from any static charge. Most electronic components are sensitive to the static electric charge. Use a grounding wrist strap and place all electronic components in any static-shielded devices.
10. The openings on the system cabinet are for the cabin ventilation to prevent the system from overheating. DO NOT COVER THE OPENINGS.
11. The brightness of the flat panel display will decrease with use. However, hours of use will vary depending on the application environment.
12. Avoid using sharp objects to operate the touch panel. Scratches on the touch panel may cause mal-calibration or non-function to the touch panel.
13. Do not subject the LCD panel display to shock or vibration. When assembling the computer, make sure it is securely installed.

Table of Contents

Chapter 1

1. INTRODUCTION

This chapter provides background information and detailed specifications on the MSB SERIES. Sections in this chapter include:

1.1. Unpacking the MSB SERIES

After unpacking the carton, you will see the MSB SERIES unit. Check and see if the power cord is already properly connected to the system and lead to the punch hole at the rear lower side of the cabinet. Remove all the EPE foams stuffed in the carton and the Kiosk cabinet. These packing materials are used to protect the components from damage during transportation. It is strongly recommended that they are kept for future transportation use.

The MSB SERIES is packed into two cartons: one carton is the top section of MSB SERIES (the LCD and the kiosk top) and one carton is the base.

1.2. General Information

The MSB SERIES Kiosk continues to exemplify the manufacturer's capability to design Kiosk units that are modular, ergonomic and serviceable.

Compact and stylish, MSB SERIES is a Web-based Multimedia Digital Signage Kiosk designed for business locations where space is extremely limited. The MSB SERIES adds a more aesthetic touch to cabinet design.

Features

- Compact & highly integrated design, easy installation in virtually any business location
- Various peripheral options allow multiple business applications to be deployed in a single unit
- Open architecture and fully PC compatible offering the best solution platform for system development
- Rugged cabinet made of heavy-duty steel allows system operation in public sectors
- Modular design eases maintenance effort and ability to add peripherals for specific applications

1.3. WHAT IS COVERED IN THIS MANUAL

This service manual provides service information for the MSB SERIES Kiosk. It is designed to help trained service personnel to locate and fix failing parts on the MSB SERIES if required. Only service technicians are allowed to open the system for service. You do not need to read everything in this handbook to service the system.

1.4. OPENING UP THE SYSTEM

The MSB SERIES should have been properly set up and configured by your dealer. You may still find it necessary to open the cabinet to access the components inside the Kiosk.

For the following reasons, you might need to open the Kiosk:

1. Integrating the Kiosk system.
2. Powering up the system.
3. Connect the devices to the Kiosk PC I/O ports.

1.5. OPENING THE TOP CABINET

To open the top cabinet, follow the steps below.

1. Make sure the system power is turned off and the system fans have stopped turning.

   There is a cabinet lock at the back side of the cabinet. The lock is used for security and service purpose to retain the Kiosk display module to the Kiosk cabinet.

2. Obtain the cabinet key from the accessory box. Insert the key into the lock. When the cabinet is locked, the key is at an almost upright or 12 o'clock position. Unlock the system by turning the key counter clockwise to approximately 9-o'clock.

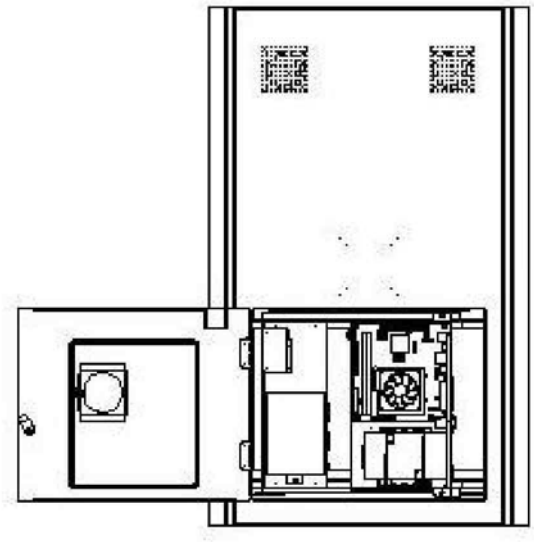

OPENING THE TOP CABINET

1.6. POWERING UP THE SYSTEM

If no peripheral devices are to be attached to the system, before powering up, check the top cabinet to make sure all the packaging has been removed. An AC power cord is already wired to the unit.

To power up the system, perform the following steps:

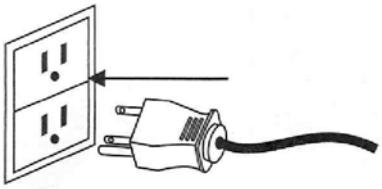

1. Connect the 3-pin female end of the power cord to the AC inlet located at the left upper side of the Kiosk PC. Plug the 3-pin male end to an AC power socket.
2. If there are any other devices connected to the system, make sure all the device cables are properly connected to the Kiosk PC I/O ports.
3. Power on the external peripheral devices first.
4. When facing the rear of the system, from your viewpoint, the power switch is at the left lower side of the Kiosk PC. Press the power switch.

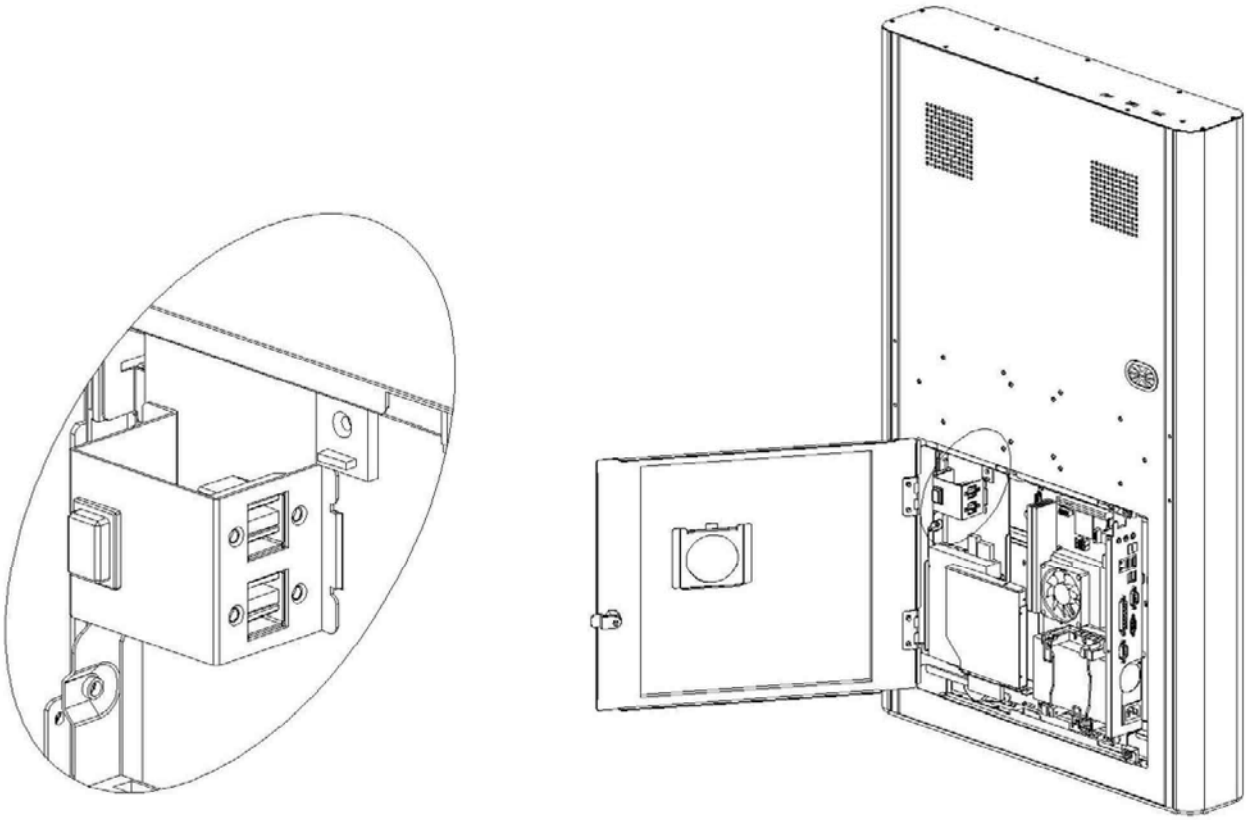

5. Close the display module by locking the top cabinet.

1.7. Identifying the System

Before getting started, take a moment to familiarize yourself with the MSB SERIES and its I/O arrangement.

When fully assembled and put upright, the MSB SERIES front view is shown below.

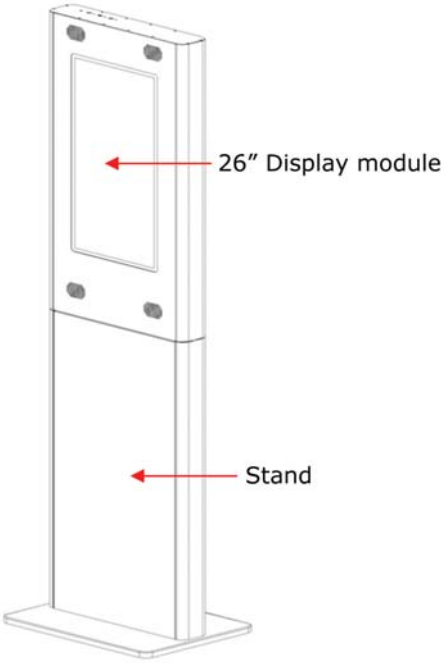

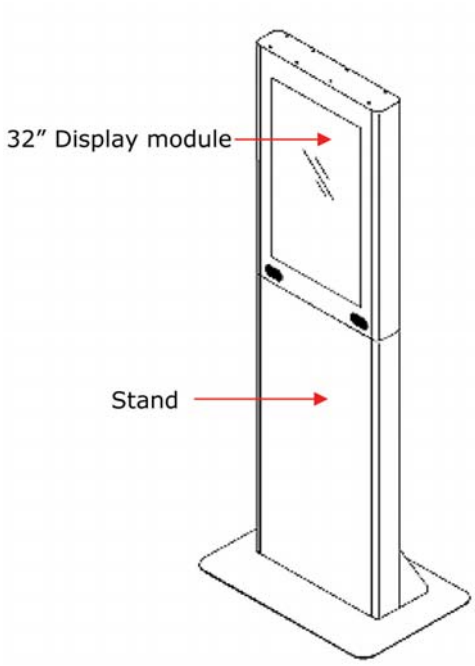

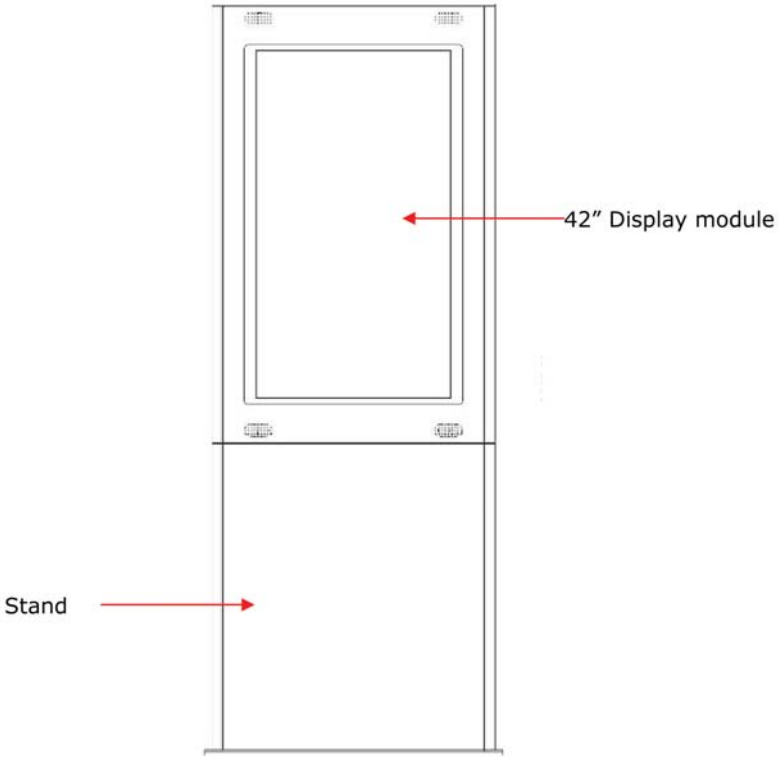

1.8. Kiosk PC I/O Outlets

Open the top cabinet to access the power switch and all the I/O ports of the Kiosk PC.

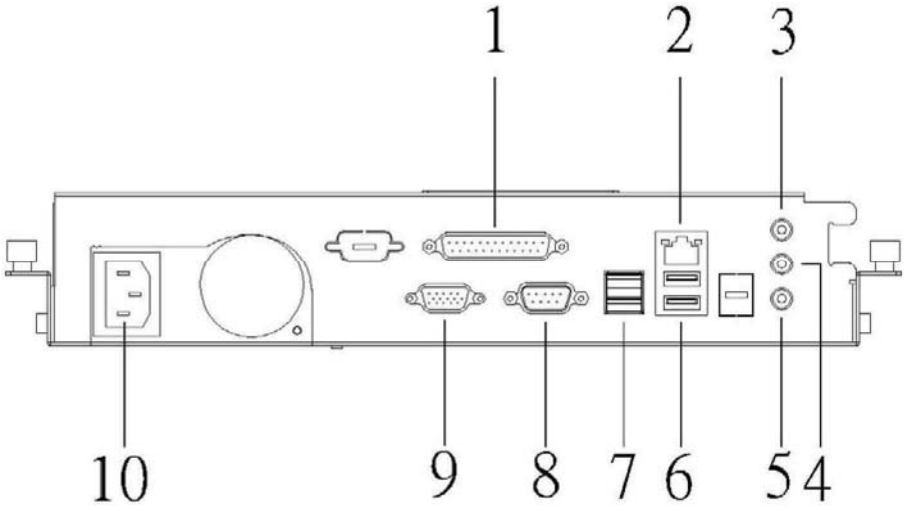

1. Printer port
2. Eyhernet(RJ-45)
3. Line-in
4. Speaker out
5. Mic-in
6. USB x 2
7. USB x 2
8. COM 1
9. VGA port
10. AC input

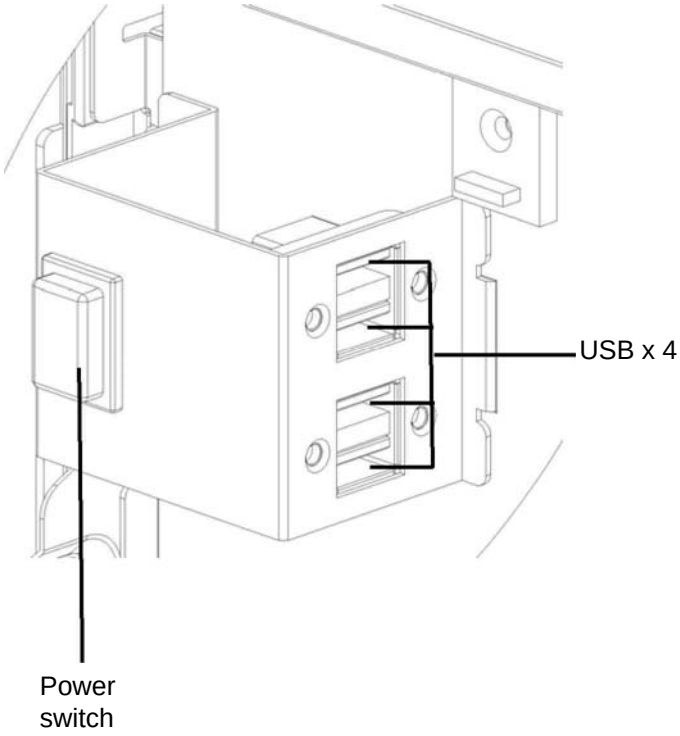

1.9. RUNNING THE BIOS SETUP

If you are a commercial user, the MSB SERIES system should have been properly set up and configured by your dealer. You may still find it necessary to change the system configuration information. In this case, you need to run the system's BIOS setup program.

Under the following conditions, the CMOS settings are to be changed.

1. The system is being started for the first time.
2. The hardware devices attached to the MSB SERIES M/F system have been changed.
3. The CMOS memory has lost power and the configuration information has been erased.

The BIOS setup program is stored in ROM, which can be accessed by pressing <DEL> key on the keyboard immediately when the system is powered on.

In order to retain the specified setup information when the system power is turned off, the system setup information is stored in a battery-backed CMOS RAM. The battery is to ensure the settings will not be erased when the computer is turned off or reset. When the computer is powered on again, the system will read the settings stored in the CMOS RAM and compare them to the equipment check conducted during the power on self-test (POST). If any error or mismatch occurs, an error message will be shown on the screen and the computer will be prompted to run the setup program.

To change the BIOS setup, please refer to Chapter 5 for more information.

1.10. OPERATING SYSTEM AND DRIVER INSTALLATION

The MSB SERIES system is not equipped with an operating system when delivered from the original manufacturer. If you are a commercial user, the system is likely to have been pre-installed with a proper operating system and software drivers by your dealer or system integrator.

If the system is not pre-installed with any system OS and drivers or you intend to install your preferred ones, there are several ways to load OS and software into the system:

1. From USB data-retrieval devices
2. From the supplied CD-ROM
3. Over Ethernet from a LAN

Recent releases of operating systems always include setup programs that load automatically and guide you through the installation. You can also refer to your OS user manual for instructions on formatting or partitioning the hard disk drive before any software installation.

The MSB SERIES system provides the following utility drivers stored in the CD-ROM diskette or utilities diskettes;

-v- Ethernet utilities

-v- VGA utilities

-v- Audio drivers

-v- Touchscreen drivers

Other device drivers

1.11. Specifications

32”/42” Multimedia Digital Signage Kiosk

System

- **CPU**
  - Intel Celeron 2.0 GHz up to Core 2 Duo 2.8 GHz
- **System Chipset**
  - Intel 945 G/GC & ICH7
- **System Memory**
  - 2 x 240 pin DDR2 up to 4GB
- **System Display**
  - 32" TFT LCD, 1920 x 1080
  - 42" TFT LCD, 1920 x 1080
  - Supports Dynamic Video Memory Technology(DVMT)
- **Kiosk PC I/O (Inside Kiosk cabinet)**
  - Serial ports x 1 (COM 1, with +5V/12V power output on pin 9)
  - Parallel port x 1 (SPP/EPP/ECP)
  - USB interface x 8
  - VGA interface x 1 (DB15 connector, support extension display function, option for 945 G)
- **Audio**
  - Speaker x 2
  - Speaker-out, Line-in & MIC-in
- **Ethernet**
  - 10/100/1000 Base-T with RJ-45
  - Supports Wake-on-LAN
- **Power Supply**
  - PC Module: ATX 180W, 100~240V/ 4A @50~60Hz
  - 32” LCD Module: 120W , 100~240V, 2A @50~60Hz (DC Output:24V)
  - 42” LCD Module: 290W , 100~240V, 5A @50~60Hz (DC Output:24V)

Peripheral & Storage Devices

- **Drive Bay**
  - 3.5" HDD SATA interface
- **Optional Device**
  - Tempered Glass
  - IR Touch Screen
  - Slim DVD-RW drive or equivalent devices

Kiosk Cabinet

- **Construction**
  - Body: heavy-duty steel
  - Profiles: aluminum alloy
- **Kiosk Design Customizable**
- **Dimension** (mm) H x W x D

MSB3200PC

- Free stand type： 585.4 x 1999.8 x 500 mm
- Wall mount type： 903.6 x 555.4 x 107.5 mm

MSB4200PC

- Free stand type： 760 x 2000 x 500 mm
- Wall mount type： 1170 x 760 x 127 mm

1.12. DIMENSIONS DRAWING

The MSB SERIES Kiosk cabinet size is shown below.

Floor Stand

32” DIMENSIONS

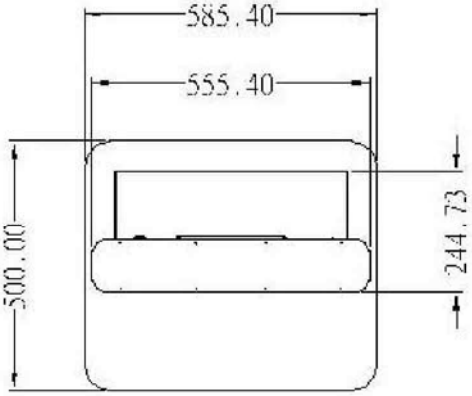

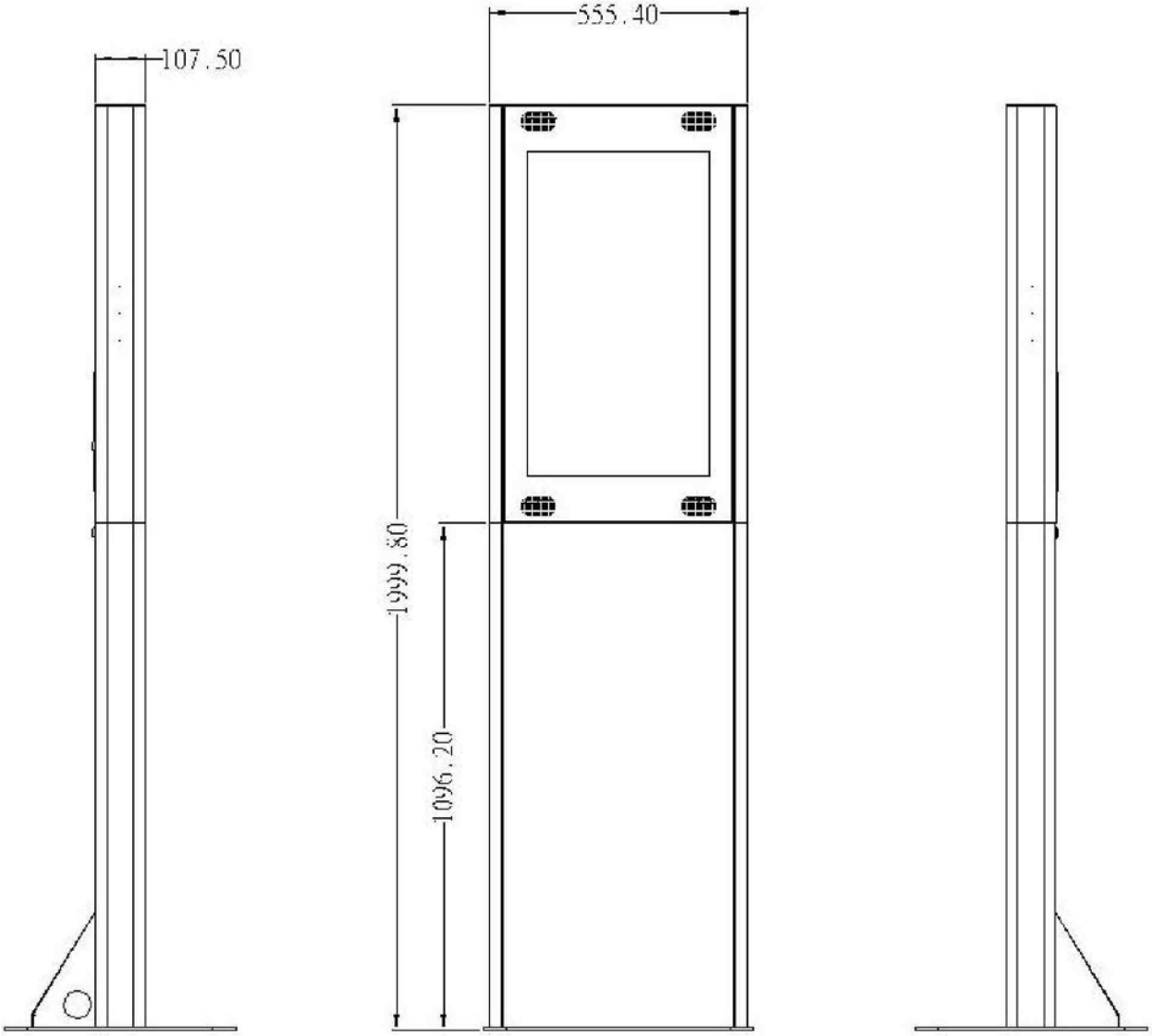

42” DIMENSIONS

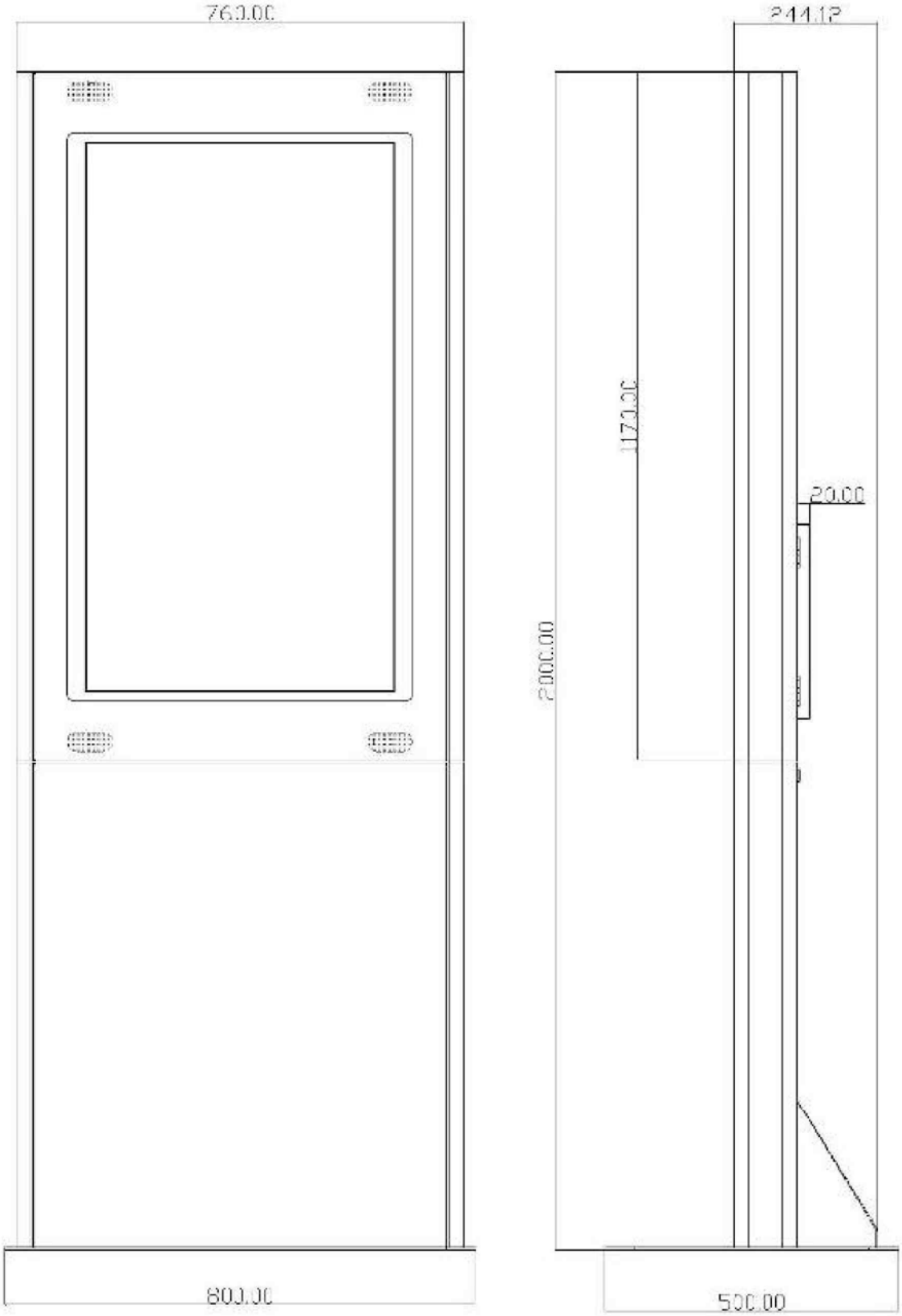

Chapter 2

2. INSTALLING DRIVERS AND SOFTWARE 2.1. Chipset drivers utility

IMPORTANT

You must install the Intel chipset before installing other drivers.

Refer to the following to install the chipset drivers

1. Locate the installation file on the CD: \\Drivers\Motherboard\PC940\ChipSet
2. Double-click **infinst_autol811.exe**.
3. Follow the onscreen instructions to complete the installation

2.2. LAN drivers

Refer to the following to install the LAN drivers.

1. Locate the installation file on the CD: \\Drivers\Motherboard\PC940\LAN
2. Double-click **Setup.exe**..
3. Follow the onscreen instructions to complete the installation

2.3. Audio drivers

The Realtek audio drivers package includes the AC'97 drivers, and audio software. Refer to the following to install the drivers.

1. Locate the installation file on the CD: \\Drivers\Motherboard\PC940\Audio
2. Select the drivers by OS.
3. Follow the onscreen instructions to complete the installation.

2.4. VGA drivers

Refer to the following to install the VGA drivers

1. Locate the installation file on the CD: \\Drivers\Motherboard\PC940\VGA
2. Double-click **win2k_xp14324.exe**. The following screen appears.
3. Follow the onscreen instructions to complete the installation

2.5. Taiwan brand Resistive Touch controller

Refer to the following to install the touch screen drivers.

1. Locate the installation file on the CD: \\Drivers\Touch screen driver\Taiwan brand Resistive Touch
2. Select the drivers by OS.
3 Follow the onscreen instructions to complete the installation

Chapter 3

3. Locating the Problem

Refer to this section to locate the problem with the MSB SERIES. The following topics are described.

3.1. General checkout guidelines

Use the following procedure to troubleshoot problems:

- Identify as many symptoms as possible in detail.
- Verify symptoms by recreating them.
- Follow the corrective procedures in order.
- If you replace an FRU and the symptom remains, reinstall the original FRU before going to the next step. Do not replace non-defective FRUs.

3.2. Power system checkout

Power system problems can result from a faulty ac adapter, or undetermined problems (such as loose connections). Refer to the following to check the ac adapter.

3.3. LCD symptoms

SYMPTOM	CORRECTIVE PROCEDURE
LCD backlight is not working but text is still visible onscreen	**14.** Reseat the LCD cable. **2** Reseat the inverter cables.
	3 Replace the inverter cables.
	4 Replace the LCD panel.

3.4. Touch screen symptoms

SYMPTOM		CORRECTIVE PROCEDURE
Touch screen does not function	**18.**	Install and run the touch screen calibration
		program from the Touchkit driver CD.
	2	Reseat the touch screen cables.
	3	Reseat the mainboard-to-LCD cables.
	4	Check the BIOS settings.

3.5. Power symptoms

SYMPTOM		CORRECTIVE PROCEDURE
Power shuts down unexpectedly	**22.** Reseat the power ac cable.	
Cannot turn the system on	2	Check the mainboard power connector.
	3	Check CPU settings.
	4	Check DRAM settings.
	5	Check the power button cable.
	6	Replace the power supply.

3.6. Network symptoms

SYMPTOM		CORRECTIVE PROCEDURE
Cannot access LAN	**27.** Confirm that the hub/switch is working	
		correctly.
	2	Reseat the RJ-45 cable.
	3	Confirm the RJ-45 LEDs are on.
	4	Reinstall the Ethernet controller.
	5	Replace the mainboard.

3.7. USB symptoms

SYMPTOM		CORRECTIVE PROCEDURE
USB ports do not function	**32.** Check the ports are detected in Windows	
		Device Manager.
	2	Reseat the USB device.
	3	Reinstall the USB device driver.
	4	Replace the USB device.

3.8. CD-ROM symptoms

SYMPTOM		CORRECTIVE PROCEDURE
The CD-ROM cannot quit.		Reseat the CD-ROM cable

3.9. Boot symptoms

SYMPTOM	CORRECTIVE PROCEDURE
System continually reboots on power up	**36.** Restore the BIOS defaults.
	2 Remove all I/O device drivers and then reinstall them.
	3 Reseat the IDE cable.
	4 Reseat memory.

Chapter 4

4. Replacing Field Replaceable Units (FRUs)

4.1. Safety and precautions

Computer components and electronic circuit boards can be damaged by discharges of static electricity. Working on computers that are still connected to a power supply can be extremely dangerous. Follow these guidelines to avoid damage to the computer or injury to yourself.

- Always disconnect the unit from the power outlet.
- Leave all components inside the static-proof packaging that they ship with until they are ready for installation.
- After replacing optional devices, make sure all screws, springs, or other small parts are in place and are not left loose inside the case. Metallic parts or metal flakes can cause electrical shorts.

Only qualified personnel should perform repairs on the MSB SERIES. Damage due to unauthorized servicing is not covered by the warranty.

If the LCD breaks and fluid gets onto your hands or into your eyes, immediately wash with water and seek medical attention.

Under no circumstances touch the inverter card while power is connected to the MSB SERIES. Unplug the power cord before attempting to replace any FRU.

To prevent static damage to components, wear a grounded wrist strap. Alternatively, discharge any static electricity by touching the bare metal chassis of the unit case, or the bare metal body of any other grounded appliance.

Hold electronic circuit boards by the edges only. Do not touch the components on the board unless it is necessary to do so. Do not flex or stress the circuit board. Do not hold components such as a processor by its pins; hold it by the edges.

4.2. Before You Begin

Make sure you have a stable, clean working environment. Dust and dirt can get into MSB SERIES components and cause a malfunction. Adequate lighting and proper tools can prevent you from accidentally damaging the internal components.

Most of the electrical and mechanical connections can be disconnected by using your fingers. It is recommended that you do not use needle-nosed pliers to disconnect connectors as these can damage the soft metal or plastic parts of the connectors.

CAUTION ***To prevent scratching the case of the MSB SERIES, make sure the worktop surface is clean and flat.***
If you need to put the display facing down, be sure to use a foam mat.

4.3. Replacing Parts

Take note of the following when replacing parts:

- If you replace an FRU and the symptom remains, reinstall the original FRU before going to the next step. Do not replace non-defective FRUs.
- When replacing a failing part, other parts that have to be removed before the failing part are listed at the top of the page.
- The arrows in the following procedures show the direction of movement to remove/replace a part, or to turn a screw or key to release a device.
- To replace a part, reverse the removal procedure.

4.4. Assembling the Kiosk

MSB SERIES supports two versatile mounting options; Pedestal and Wall Mounting. The wall mounting solution is ideal for installation when floor space is a consideration.

4.4.1.Pedestal Mounting for 26”

Perform the following steps to mount the MSB SERIES using the pedestal.

1. Secure the stand with the base plate

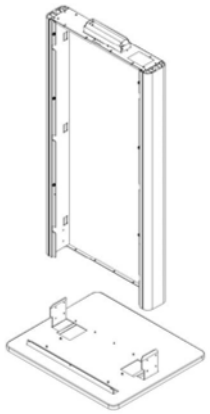

2. Secure with M4 screw-nut x 4 pcs
   Secure with TMS M4x8L screw x 8 pcs
   Secure with Screw M5 x 10L 9 pcs

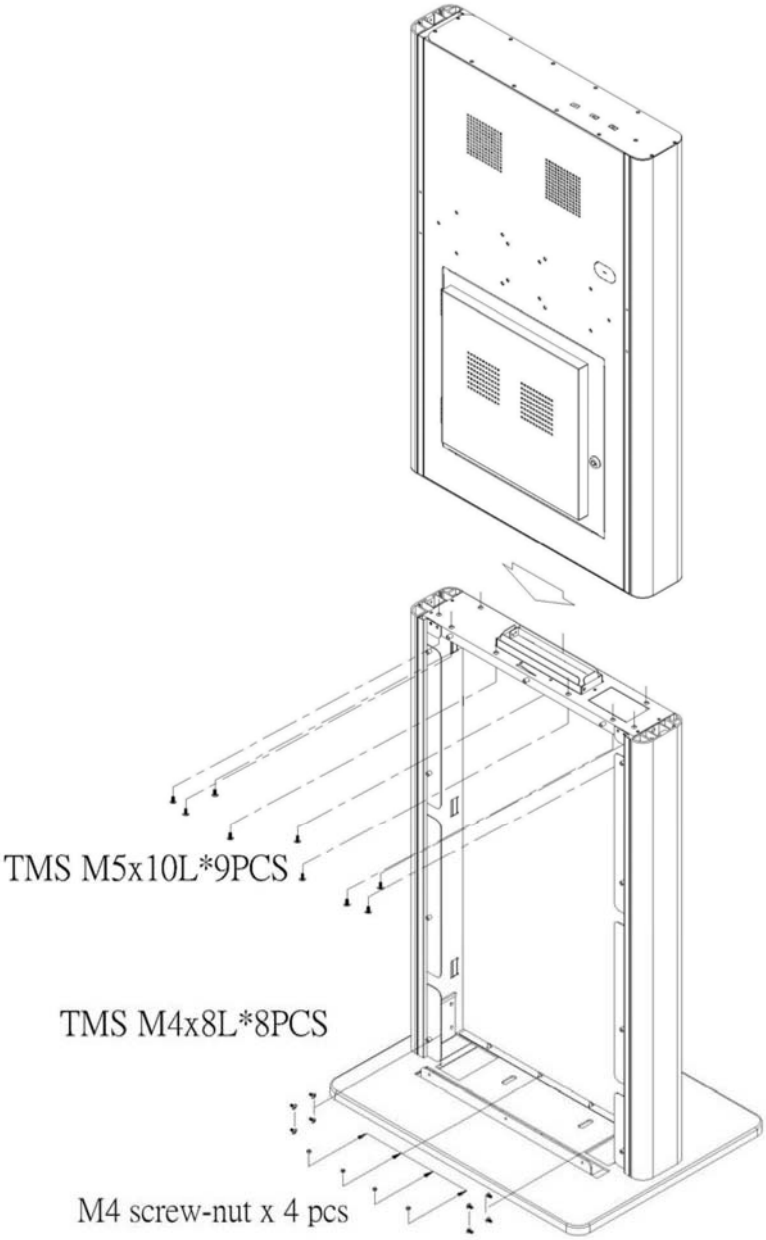

3. Secure the cover
4. Secure the cover with TMS M4x8L screw x3 pcs
5. FMS M4 x 6L 11 pcs

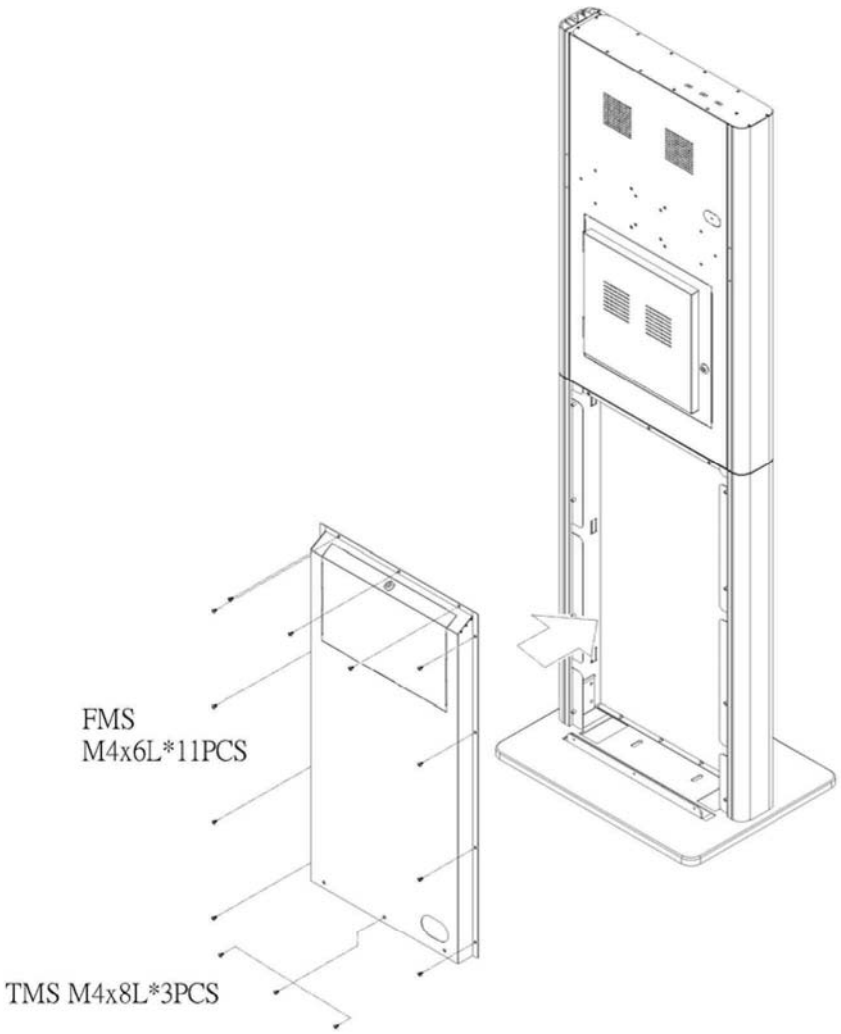

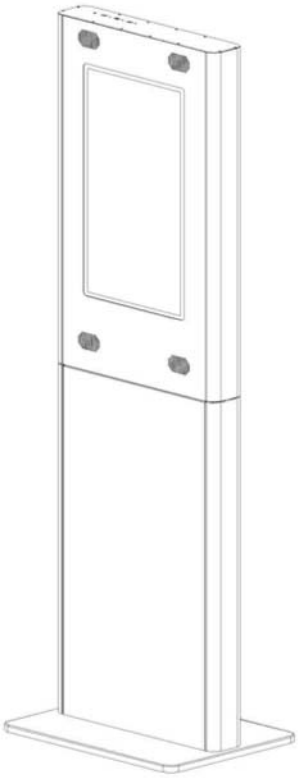

4.4.2. Pedestal Mounting for 32”

Perform the following steps to mount the MSB SERIES using the pedestal.

6. Secure the stand with the base plate

7. Secure with M4 screw-nut x 5 pcs
8. Secure with TMS M4x8L screw x 8 pcs

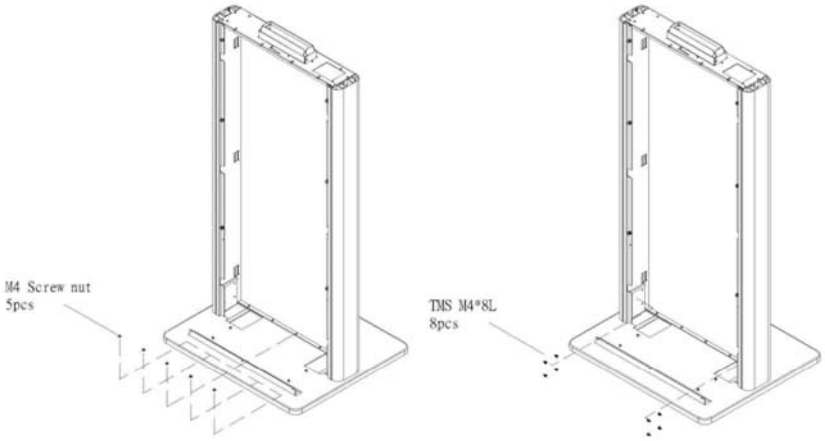

9. Secure the cover
10. Secure the cover with TMS M4x8L screw x3 pcs
11. Secure the cover with FMS M3 x 5L 2 pcs

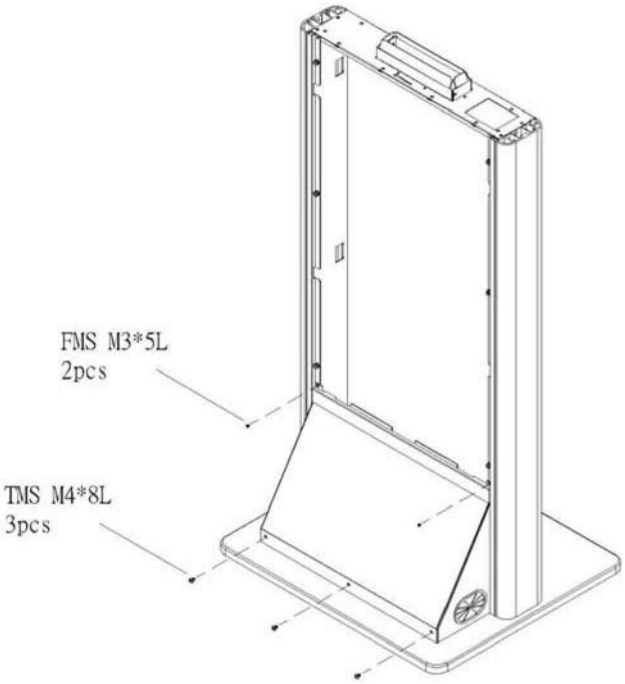

12. Remove the cover from the stand as shown.

13. Insert the Display module into the stand as shown.
14. Secure with M4 screw-nut x 4 pcs
15. Secure with TMS M4x8L thumb screw x 6 pcs

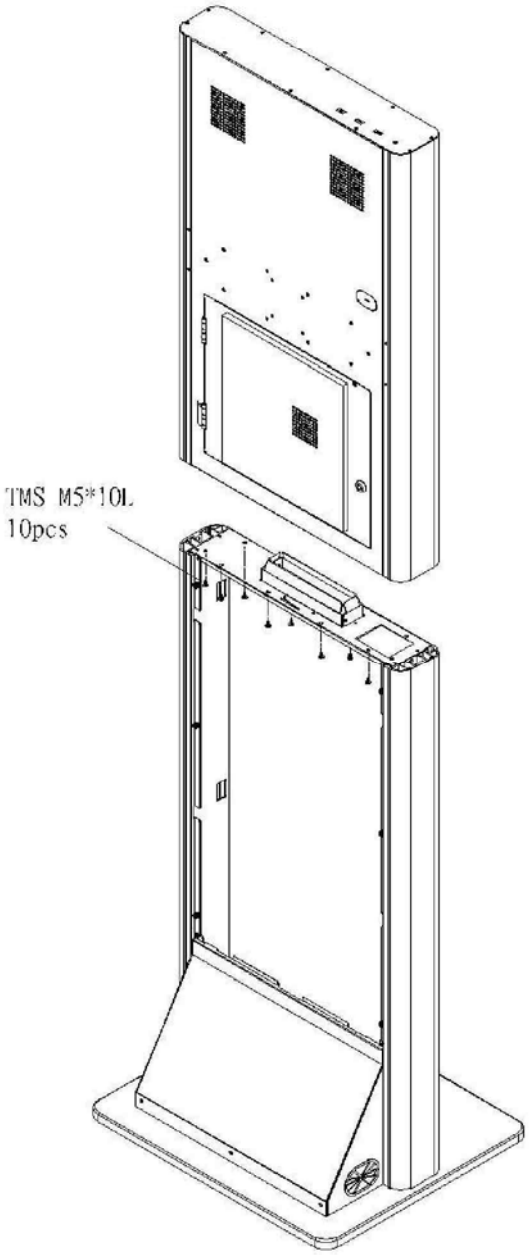

4.4.3.Pedestal Mounting for 42”

Perform the following steps to mount the MSB SERIES using the pedestal.

1. Secure the stand with the base plate

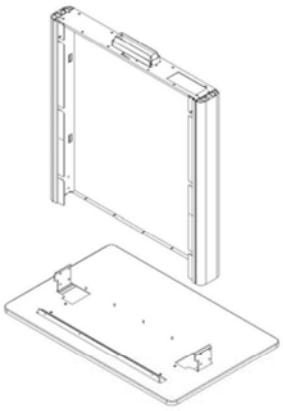

2. Secure with M4 screw-nut x 5 pcs
3. Secure with TMS M4x8L screw x 8 pcs

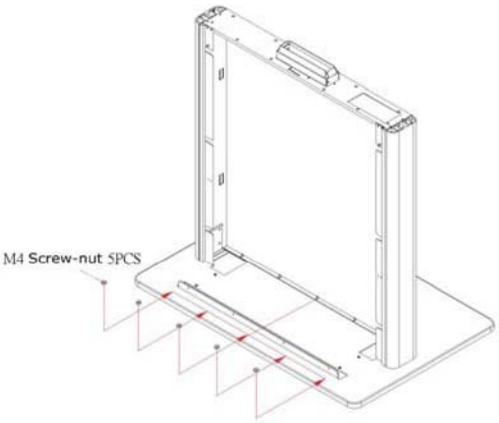

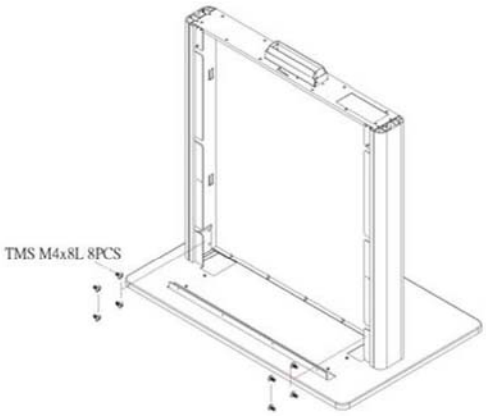

4. Secure the cover
5. Secure the cover with TMS M4x8L screw x4 pcs
6. Secure the cover with TMS M3 x 5L 4 pcs

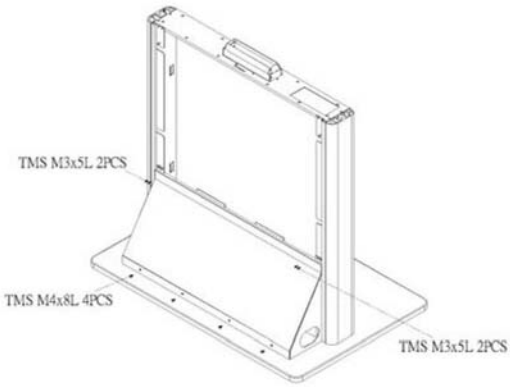

7. Remove the cover from the stand as shown.

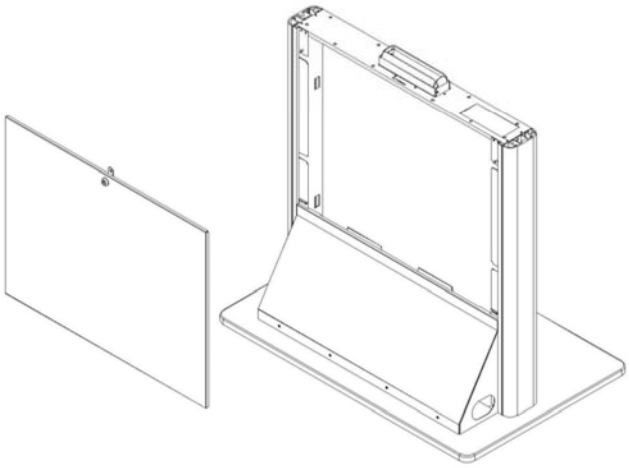

8. Insert the Display module into the stand as shown.
9. Secure with TMS M5x10L thumb screw x 11pcs

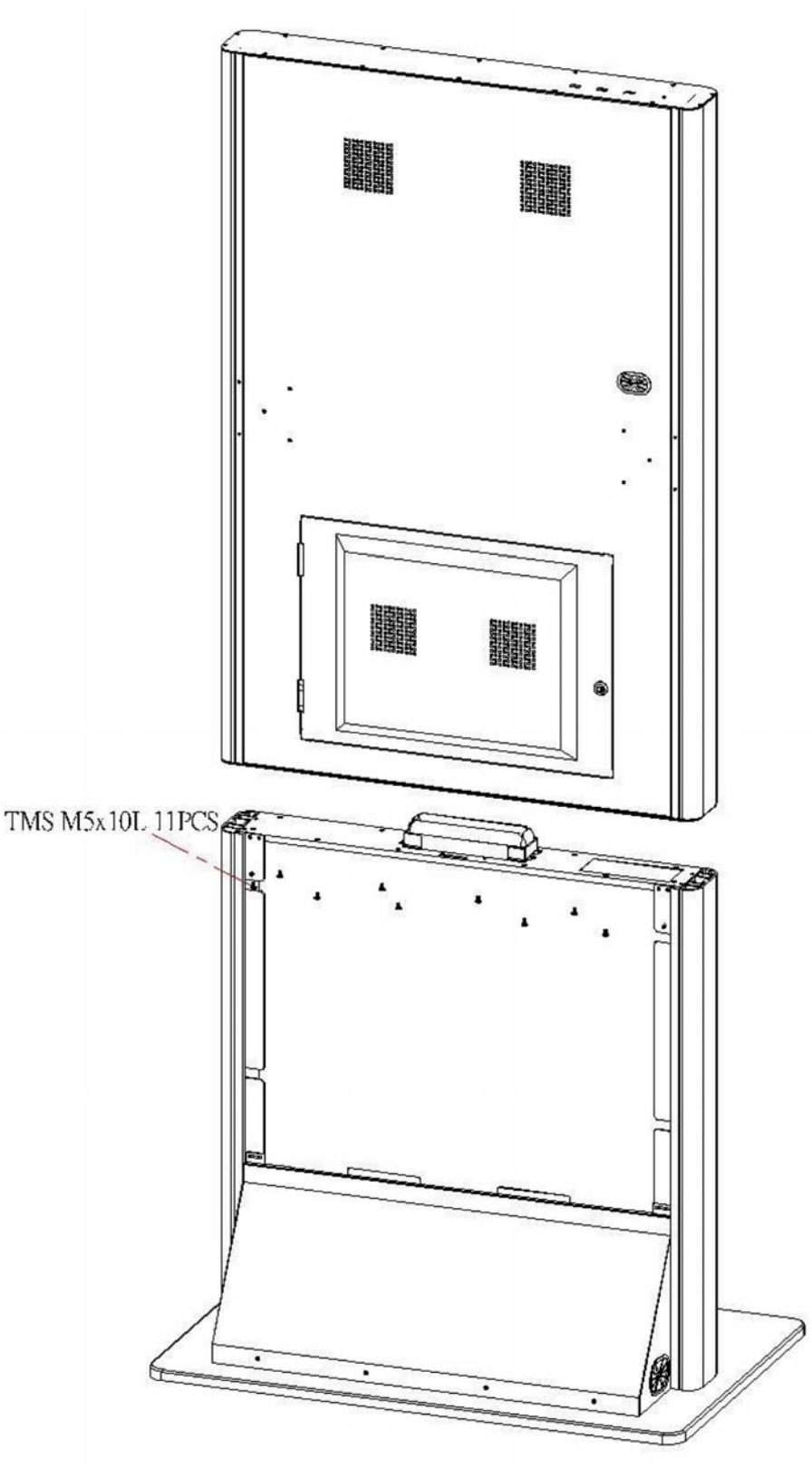

4.4.4.Heat sink

1. Remove the 4 screw. **2.** Remove the cable. **3.** Remove the heat sink.	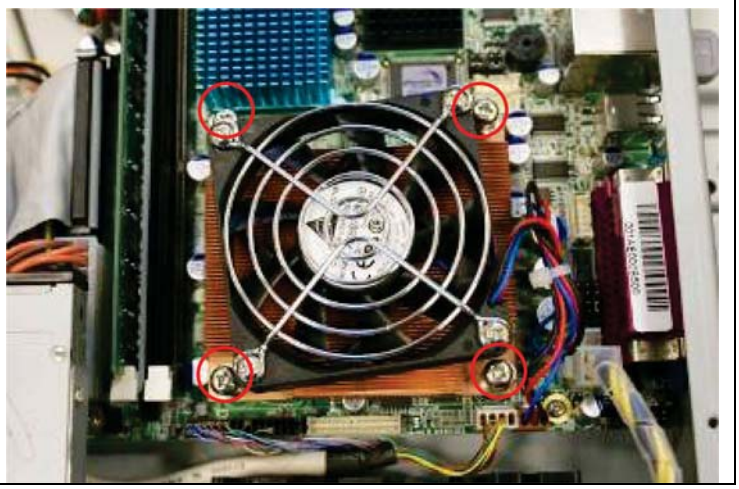

4.4.5.Memory

1. Open the release latches. **2.** Remove the memory.	

4.4.6. HDD module

1. Remove the 2 cables. **2.** Release the thumb screw. **3.** Remove the HDD module.	

4.4.7.HDD

1. Remove the 4 screws. **2**. Remove the HDD.	

4.4.8.USB module

1. Release the cable holder. **2.** Remove the 2 cables. **3.** Remove the 4 screws. **4.** Remove the USB module. **5.** Remove the 4 screws. **6.** Remove the USB board.	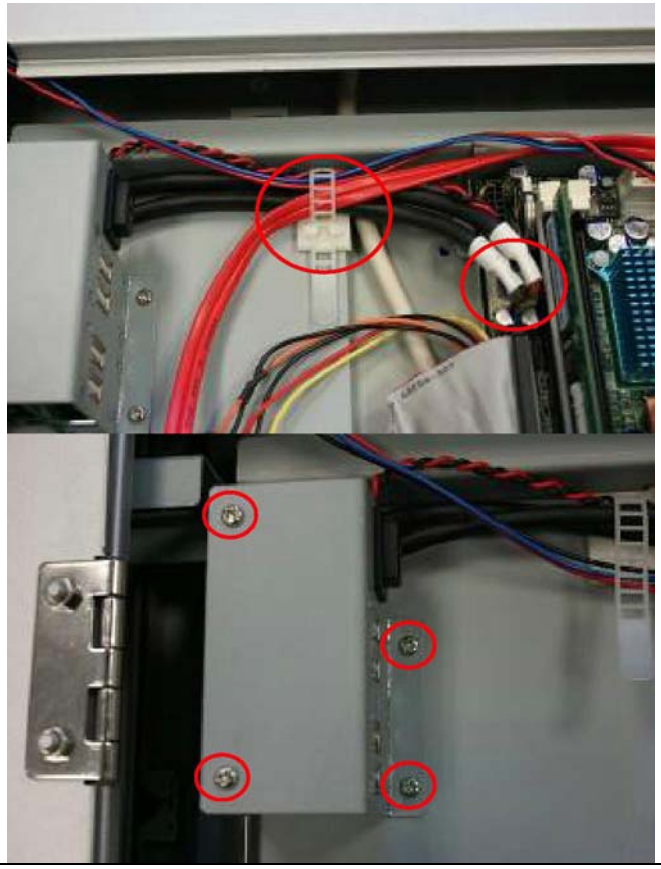

	

4.4.9.PC module

1. Remove all connected cables **2.** Release the thumb screw. **3.** Remove the PC module	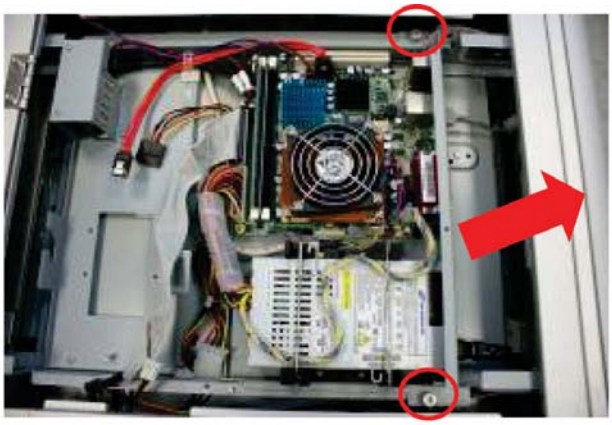

4.4.10. Power

1. Remove the 2 cables. **2.** Open the power clip. **3.** Remove the power.	

4.4.11. Mainboard

1. Remove all connected cables. **2.** Remove the 4 screws **3.** Remove the 6 IO screws. **4.** Remove the mainboard.	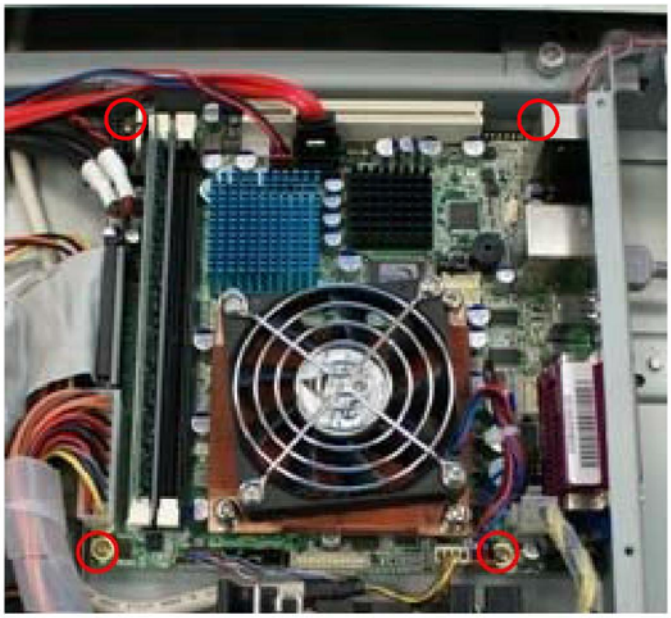 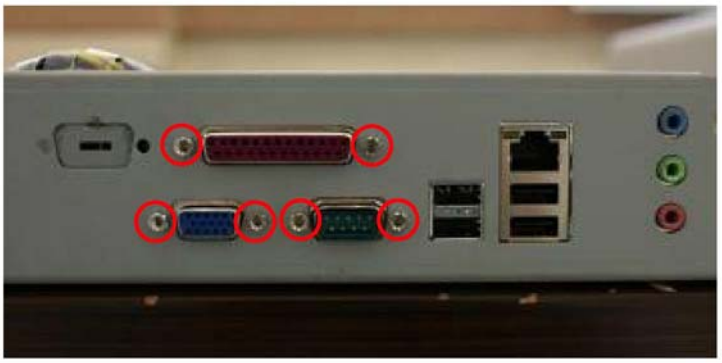

4.4.12. Speakers

1. Remove the 8 screws. **2.** Remove the speakers.	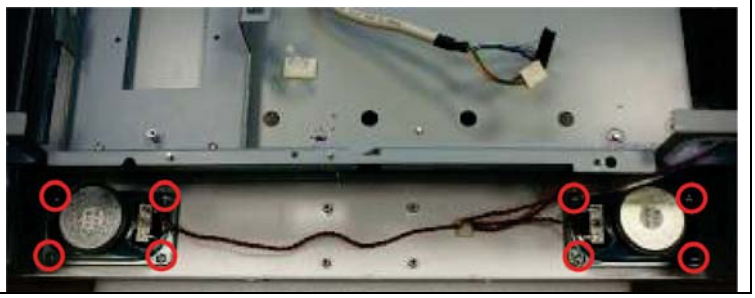

4.4.13. LCD power adaptor for 32”

1. Remove the 4 screws. **2.** Remove the bracket.	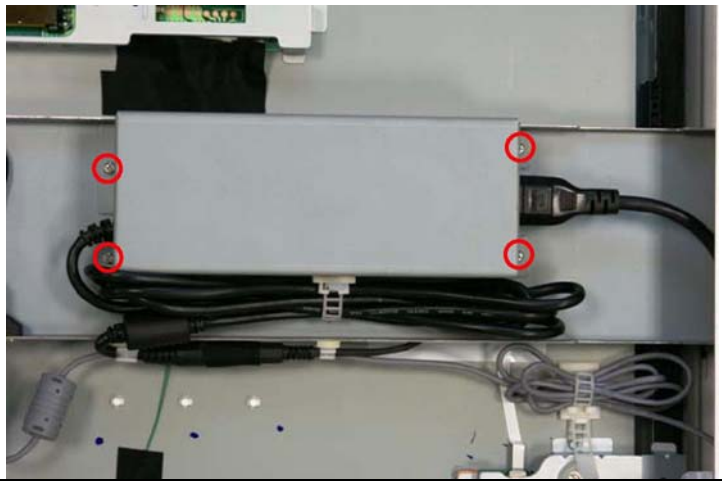

4.4.14. LCD power adaptor for 42”

1. Remove the 3 cables. **2.** Remove the 4 screws. **3.** Remove the power adaptor.	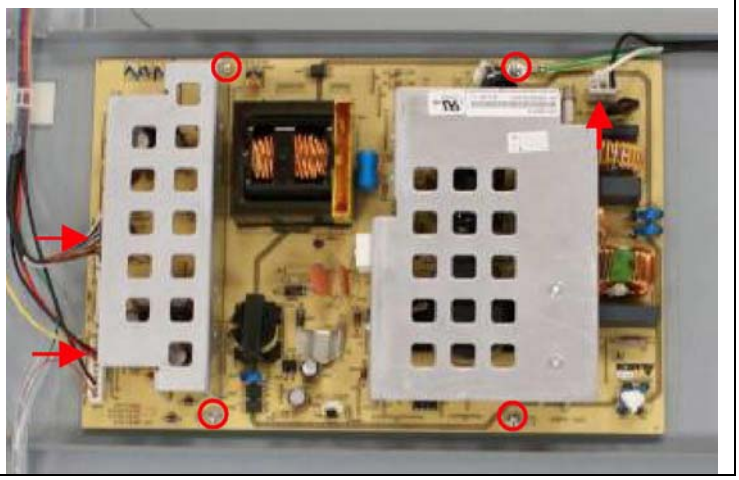

4.4.15. 26” Display module

4.4.15.1. Back Cover

1. Remove the top 10 screws. **2.** Remove the top brackert. **3.** Move the back cover upward. **4.** Remove the back cover.	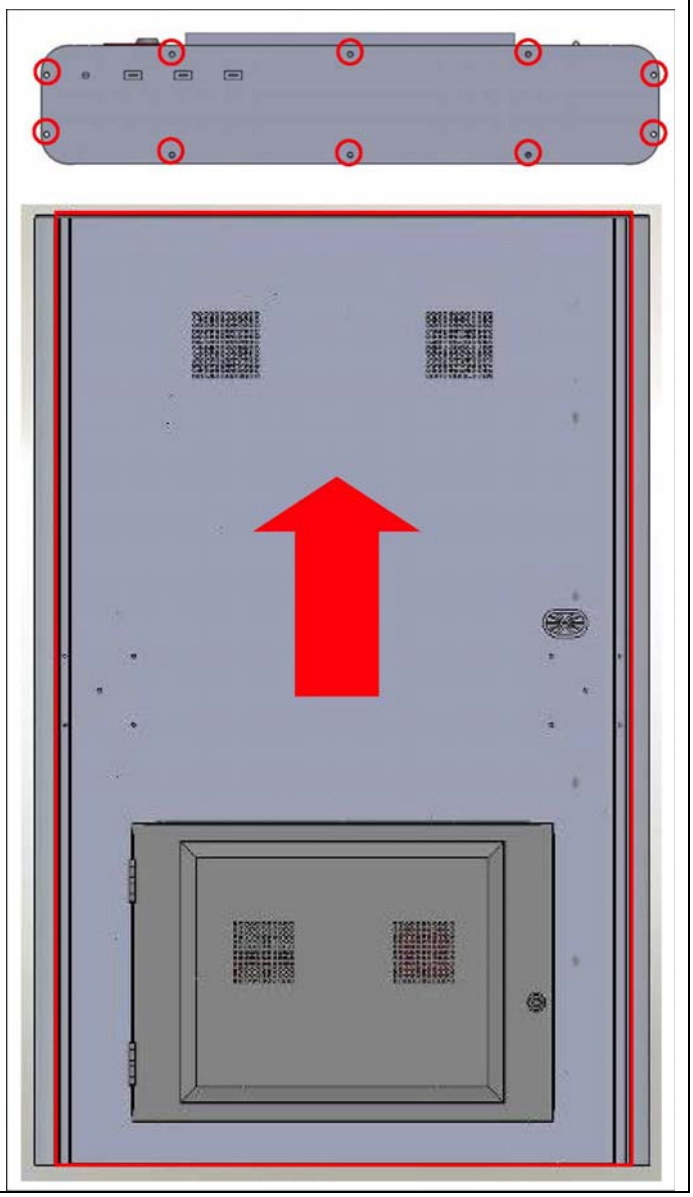

4.4.15.2. Front bezel

1. Remove the top 10 screws.

2. Remove the top brackert.

3. Move the front bezel upward.

4. Remove the front bezel.

5. Remove the touch cable.

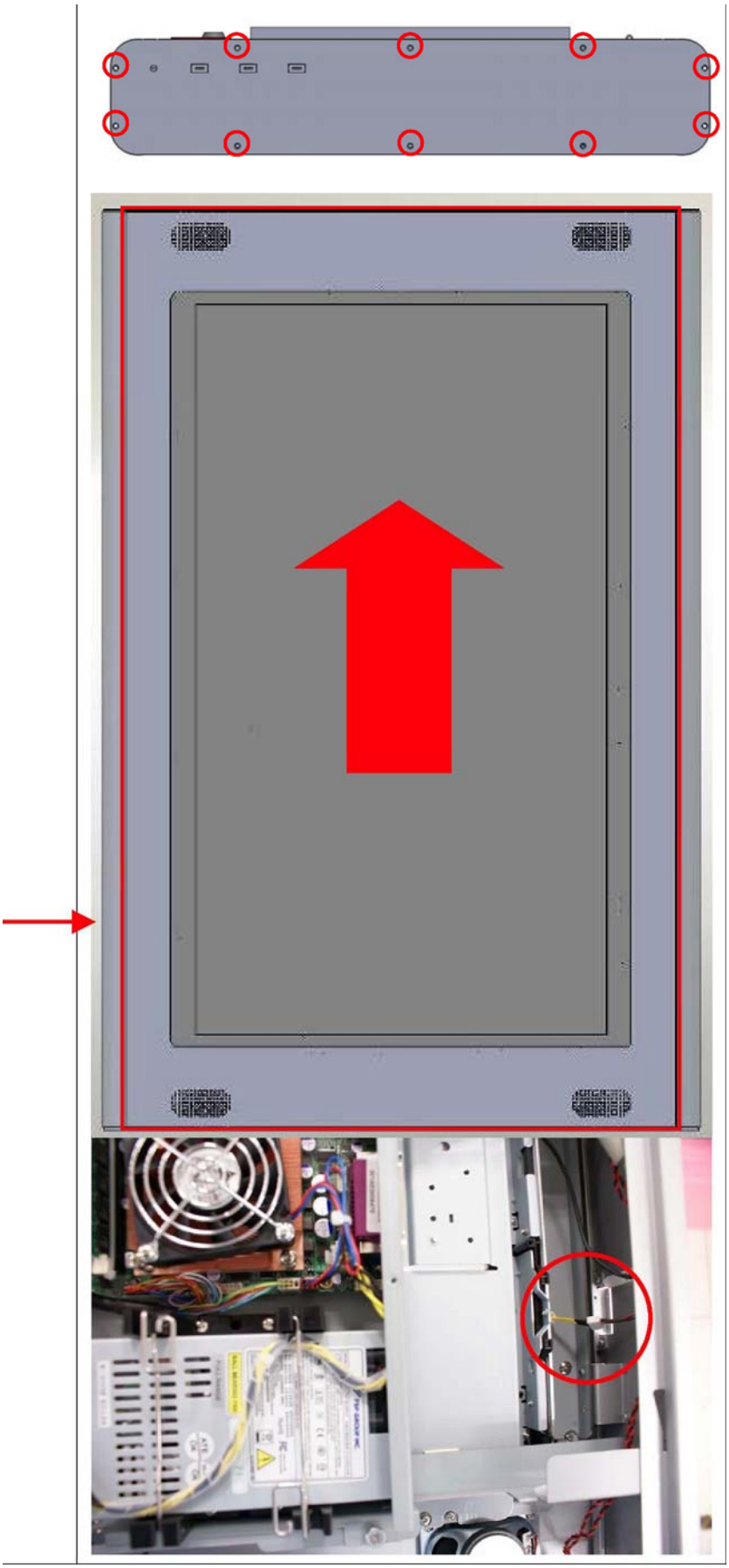

4.4.15.3. LCD

1. Remove the 10 screws. **2.** Remove the LCD.	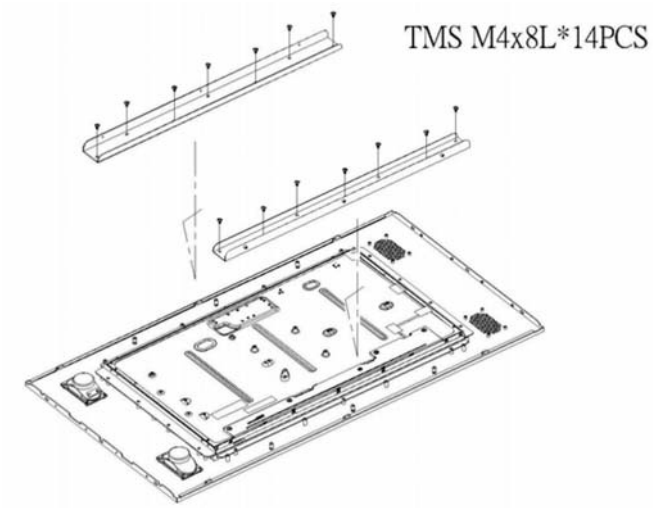

4.4.15.4. LCD Bracket

4.4.15.4. LCD Bracket **1.** Remove the 4 screws. **2.** Remove the 2 lcd brackets.	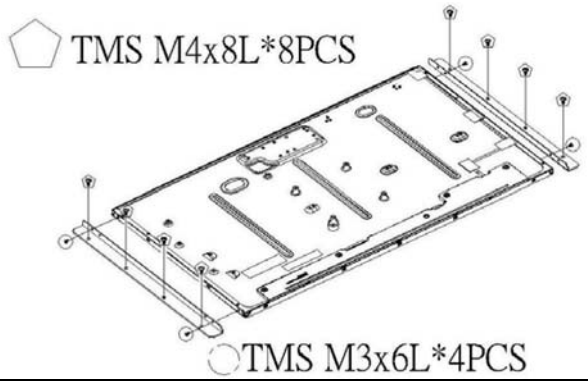

4.4.15.5. Touch

1. Remove the 12 screws. **2.** Remove the 14 touch brackers. **3.** Remove the touch.	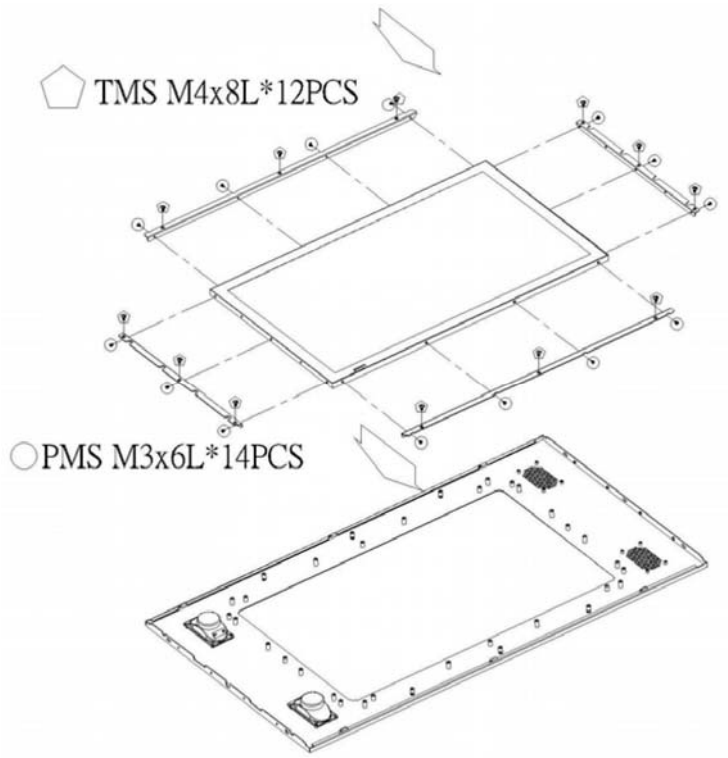

4.4.16. 32” Display module

4.4.16.1. Back Cover

5. Remove the top 10 screws. **6.** Remove the top brackert. **7.** Move the back cover upward. **8.** Remove the back cover.	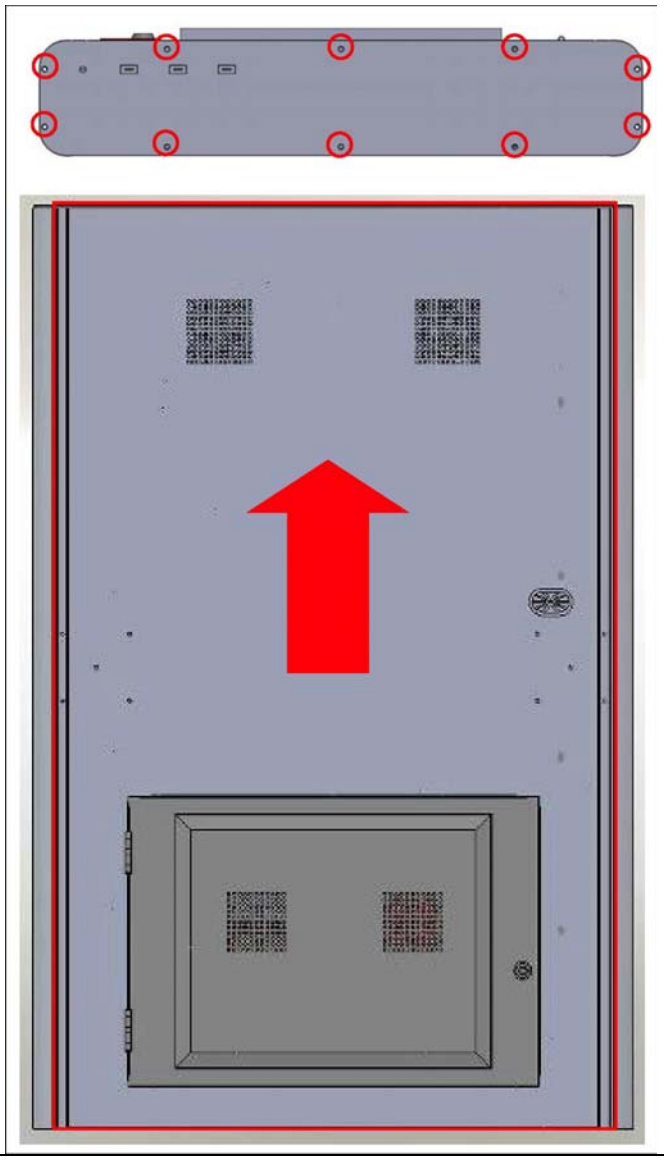

4.4.16.2. Front bezel

6. Remove the top 10 screws.

7. Remove the top brackert.

8. Move the front bezel upward.

9. Remove the front bezel.

10. Remove the touch cable.

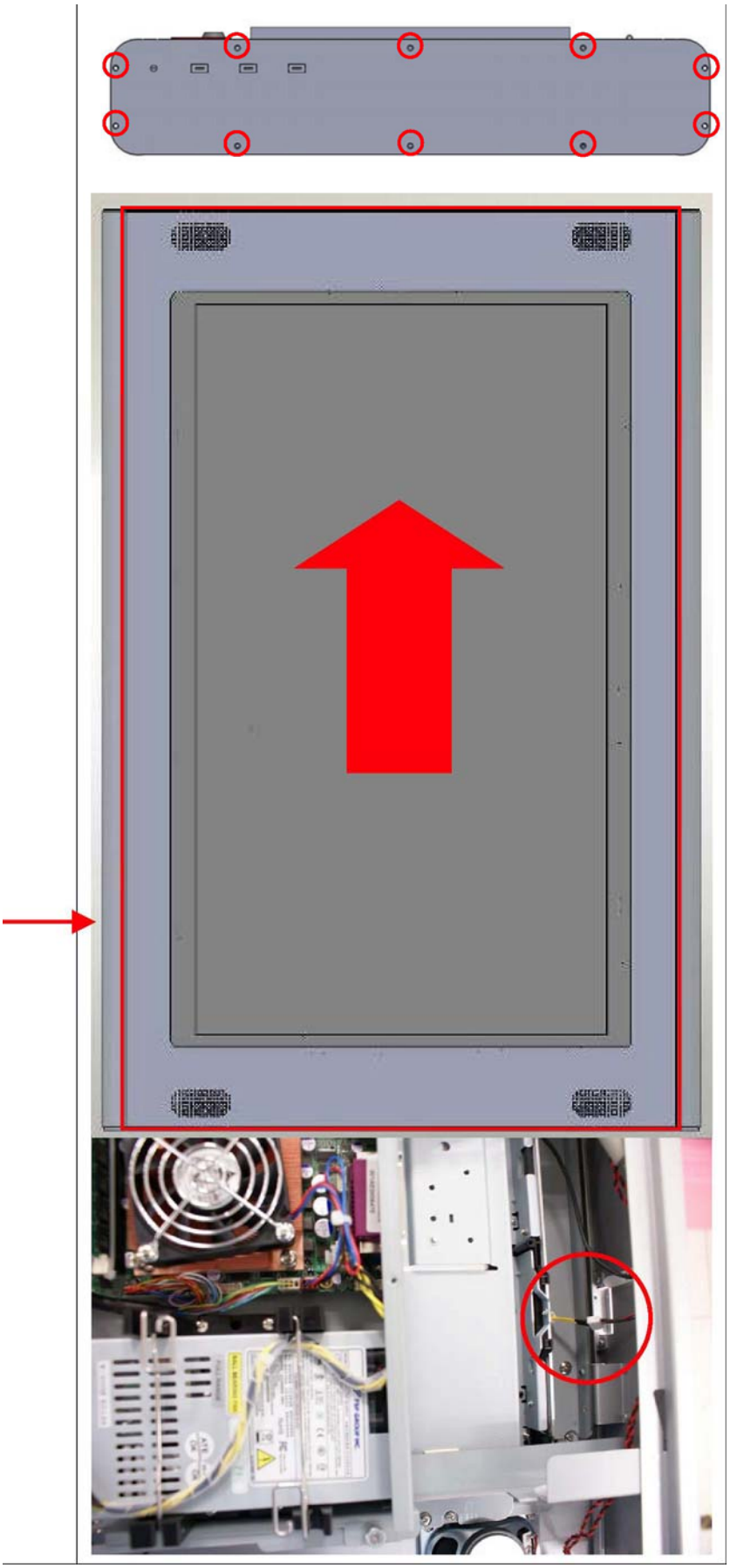

4.4.16.3. LCD

3. Remove the 10 screws. **4.** Remove the LCD.	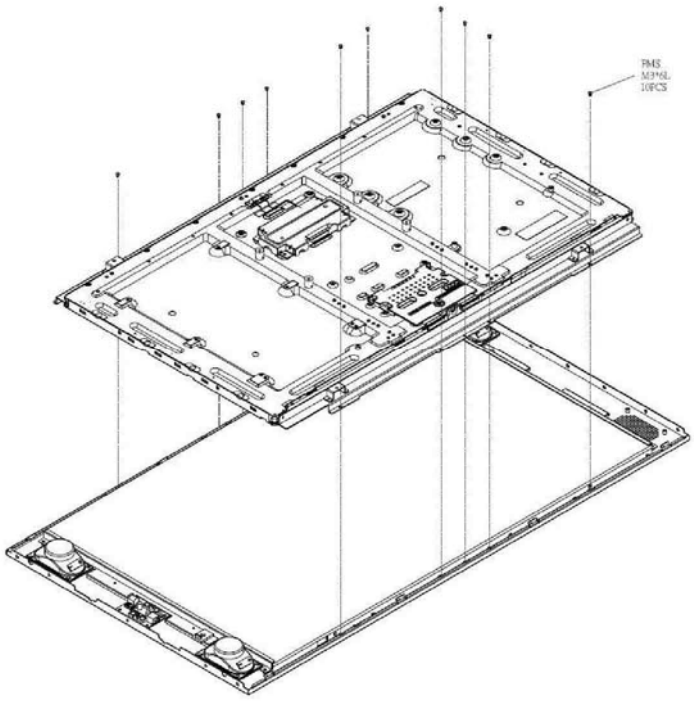

4.4.16.4. LCD Bracket

3. Remove the 4 screws. **4.** Remove the 2 lcd brackets.	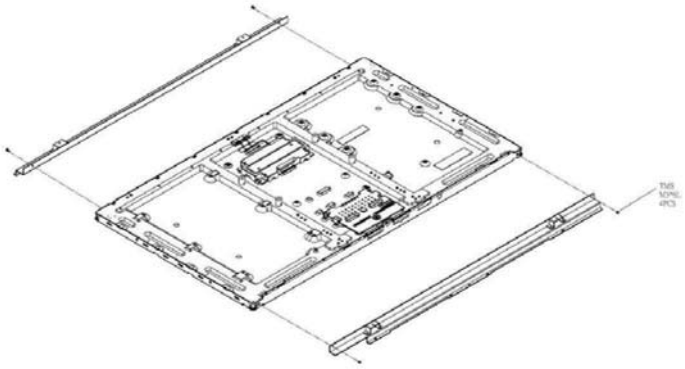

4.4.16.5. Touch

4. Remove the 8 screws. **5.** Remove the 2 touch brackers. **6.** Remove the touch.	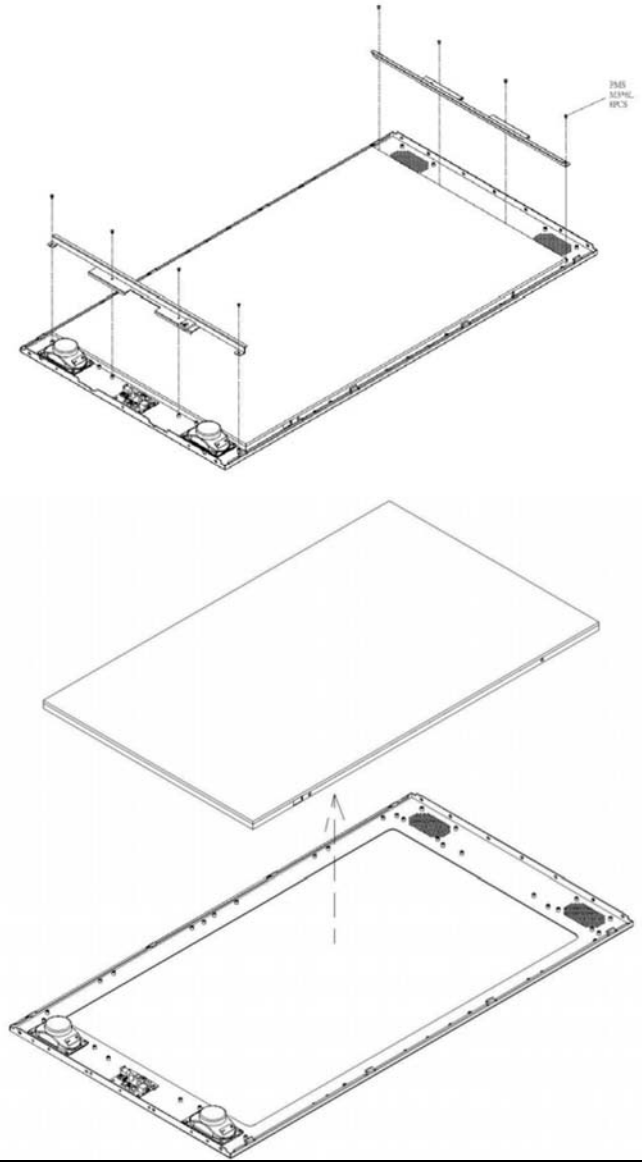

4.4.17. 42” Display module

4.4.17.1. Back Cover

1. Remove the top 14 screws. **2.** Remove the top brackert. **3.** Move the back cover upward. **4.** Remove the back cover.	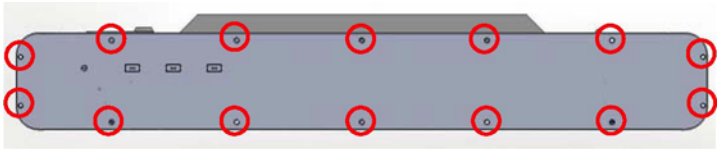 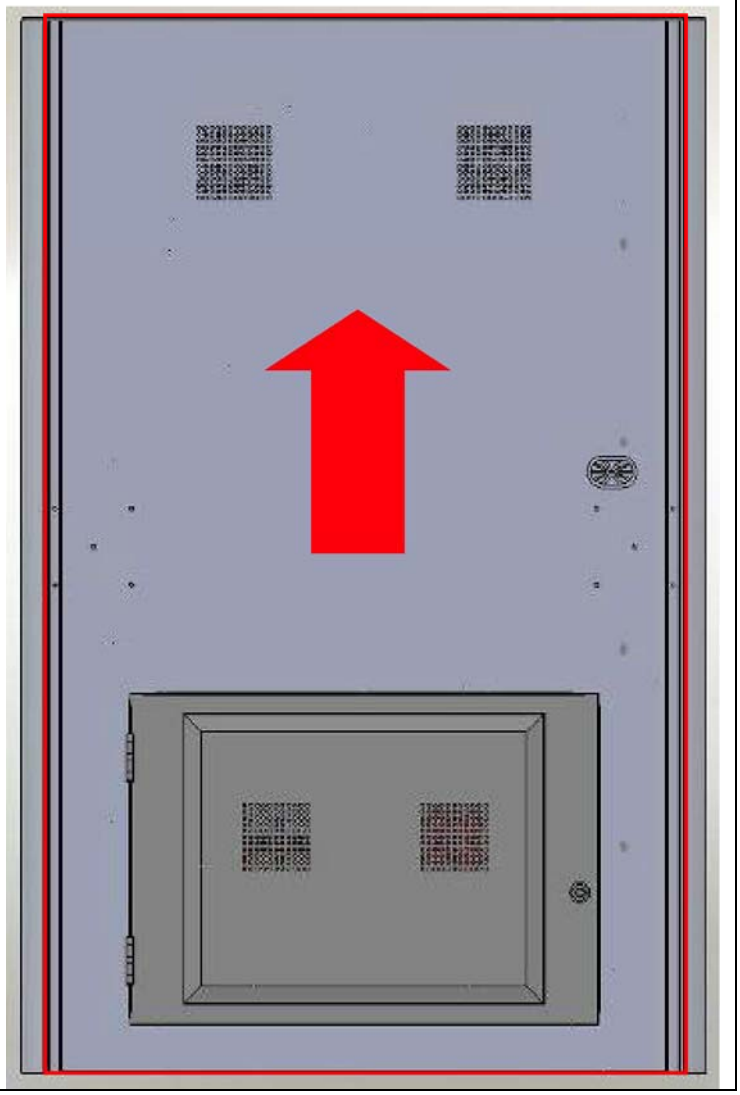

4.4.17.2. Front bezel

1. Remove the top 14 screws.
2. Remove the top brackert.
3. Move the front bezel upward.
4. Remove the front bezel.
5. Remove the touch cable.

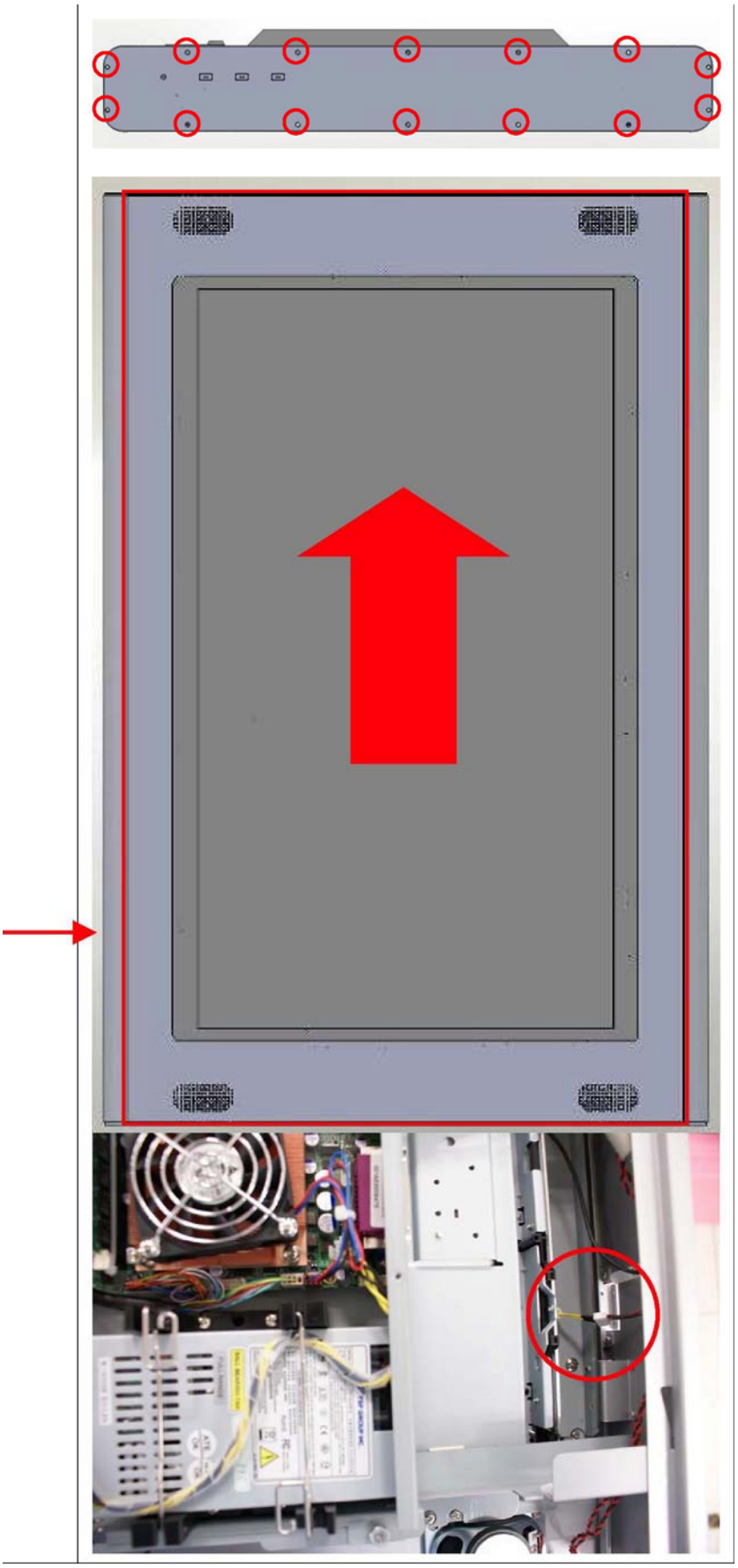

4.4.17.3. LCD

1. Remove the 16 screws. **2.** Remove the LCD.	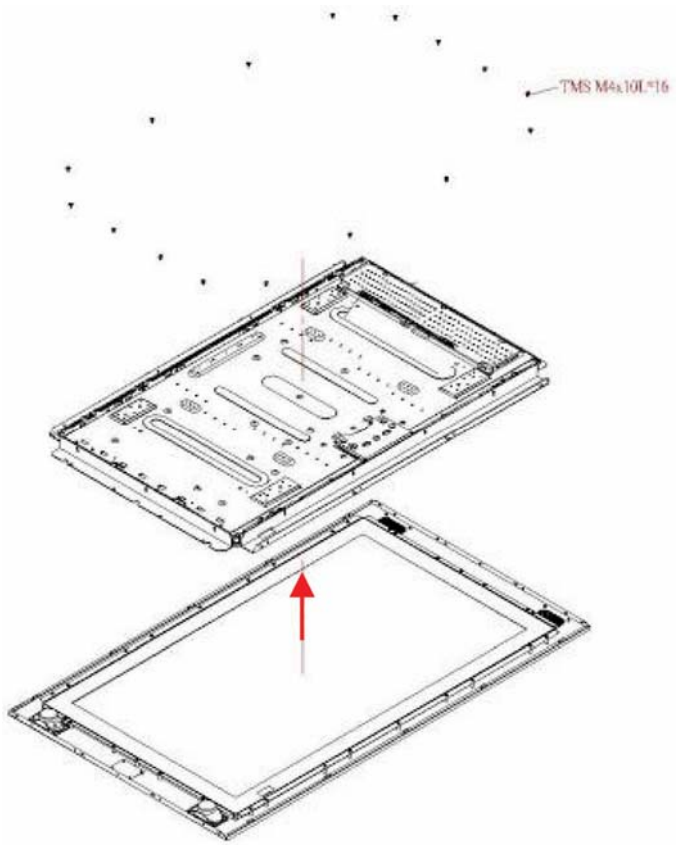

4.4.17.4. LCD Bracket

1. Remove the 14 screws. **2.** Remove the 4 lcd brackets.	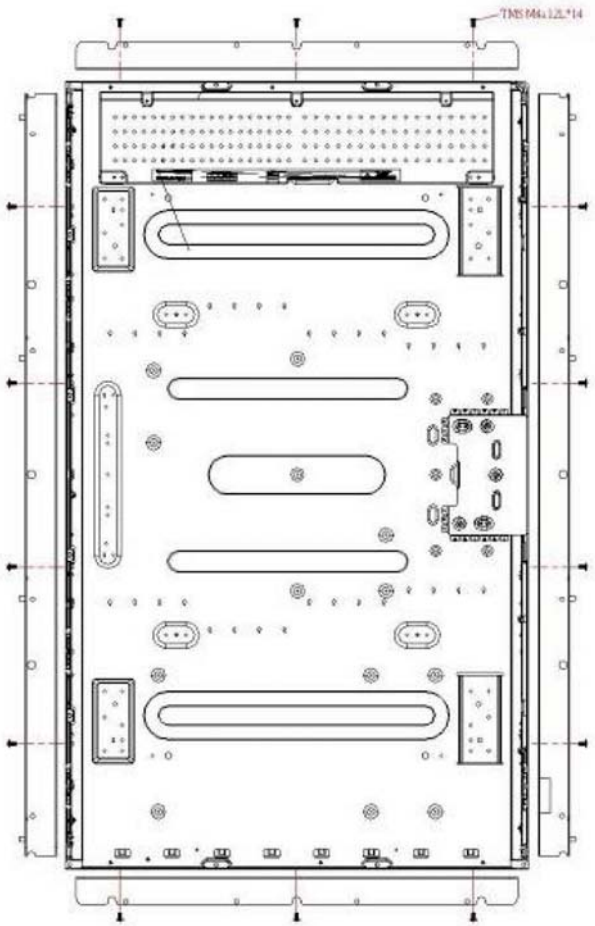

4.4.17.5. Touch

1. Remove the 16 screws. **2.** Remove the touch.	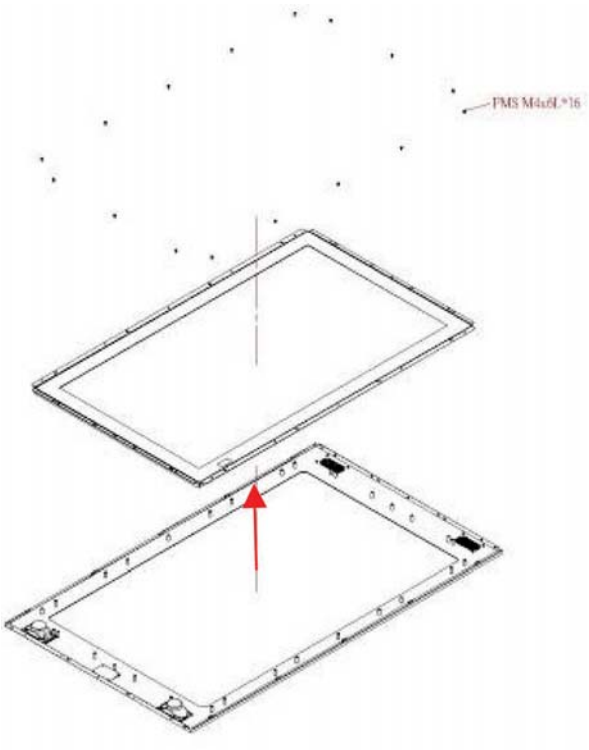

4.4.17.6. Touch bracket

1. Remove the 10 screws. **2.** Remove the 4 touch brackets.	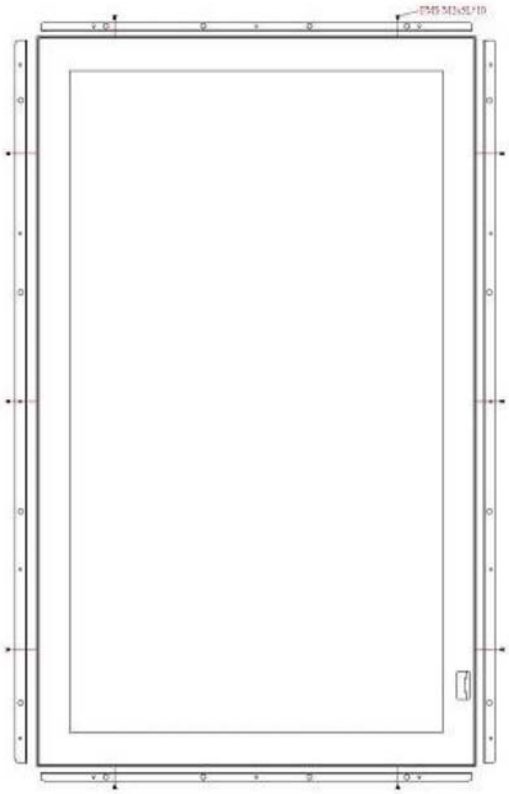

Chapter 5

5. PC 940THER BOARD

5.1. LOCATING JUMPERS & CONNECTORS

The following figure helps you to locate the jumpers and connectors on the motherboard.

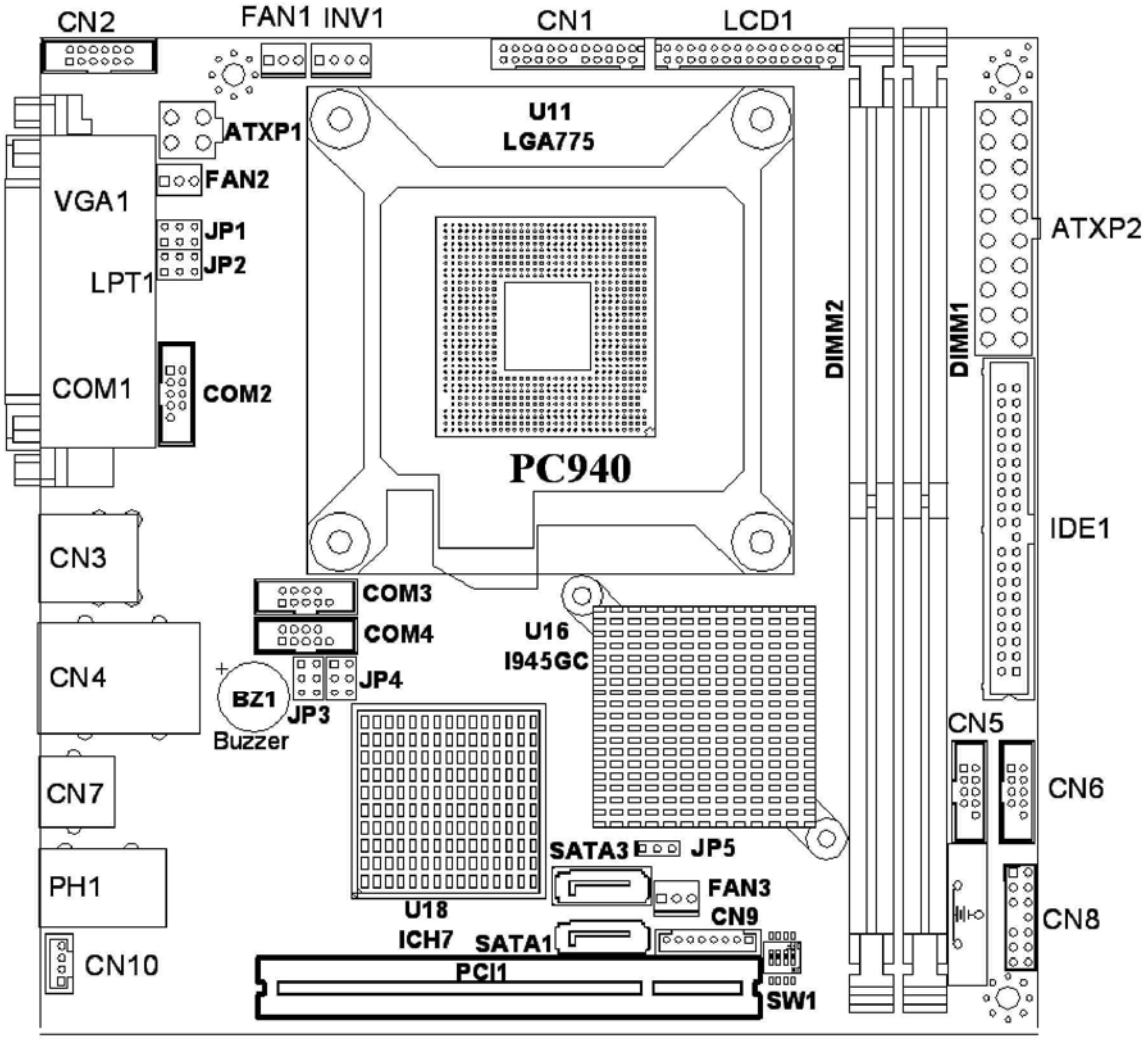

5.1.1. JUMPERS & JUMPER SETTING

The table below lists the function of each jumper. The related jumper settings are shown in the coming sections.

Jumper	Description
JP1	COM1 pin 9 power selection
JP2	COM2 pin 9 power selection
JP3	COM3 pin 9 power selection
JP4	COM4 pin 9 power selection
JP5	Clear CMOS

■ **JP1 : Serial Port 1 Pin9 Function Select**

The Serial port power selection is selected via jumper setting

RI	5V	12V
1-2	3-4	5-6

■ **JP2,JP3,JP4 : Serial Port 2~4 Pin8 Function Select**

The Serial port power selection is selected via jumper setting

RI	5V	12V
1-2	3-4	5-6

■ **JP7 : Clear CMOS (JP3)**

1-2	Normal
2-3	Clear CMOS

5.1.2. CONNECTORS & PIN ASSIGNMENT

The table below lists the function of each connector on the PC940. Their corresponding pin assignments will be shown in the following sections.

Connector	Description
ATXP1	ATX +12V power connector
ATXP2	ATX power connector
CN1	Internal Function Connector
CN2	Internal VGA Connector
CN3	External USB Port
CN4	External Ethernet & USB Port
CN5,CN6	Internal USB Port
CN7	External Cache Drawer Connector
CN8	Front Panel Function Connector
CN9	Reserve for Update System BIOS
CN10	Internal Speaker Connecot
INV1	LCD Inverter connector
LCD1	LCD connector
IDE1	PATA connector For CD-ROM
S ATA1,3	SATA1,3 connector
COM1	Serial port 1
LPT1	Parallel port
VGA1	VGA Display Connector
COM2	Serial port 2
COM3~4	Serial port 3~4
FAN1	CPU FAN connector
FAN2,FAN 3	System FAN connector
PCI1	PCI Slot

■ **ATXP1 : ATX +12V Power Connector**

ATXP1 is a standard +12V ATX power connector. Its pin assignments are listed below

Pin #	Signal	Pin #	Signal
1	GND	3	+12V
2	GND	4	+12V

■ **ATXP2 : ATX Power Connector**

ATXP2 is a standard ATX power connector. This connector is provided to connect to an ATX power supply. The plug of the power supply will only insert in one orientation due to the different hole size. Find the proper orientation and push down the power connector firmly to make sure the pins are aligned. Its pin assignments are listed below **:**

Pin #	Signal	Pin #	Signal
1	3.3V	11	3.3V
2	3.3V	12	-12V
3	Gnd	13	Gnd
4	+5V	14	PSON#
5	Gnd	15	Gnd
6	+5V	16	Gnd
7	Gnd	17	Gnd
8	PWROK	18	-5V
9	SB5V	19	+5V
10	+12V	20	+5V

■ **CN1 :** Internal Function Connector

The Connector include COM3 ,CN10,INV1 & Keyboard Function

Pin #	Signal	Pin #	Signal
1	COM3 DCD-	2	COM3 DSR-
3	COM3 SIN	4	COM3 RTS-
5	COM3 SOUT	6	COM3 CTS-
7	COM3 DTR-	8	COM3 RI-/POWER
9	Gnd	10	VCC
11	KEY	12	USB POWER
13	USB6-	14	USB7-
15	USB6+	16	USB7+
17	GND	18	GND
19	KB DATA	20	Black Light VR
21	KB CLK	22	Black Light Enable
23	KB POWER	24	+12V

■ **CN2 :** Internal VGA Connector

Pin #	Signal	Pin #	Signal
1	CRT Red	2	Gnd
3	CRT Green	4	Gnd
5	CRT Blue	6	Gnd
7	CRT Hsync	8	CRT Vsync
9	CRT DDC DATA	10	CRT DDC CLK

11 +12V 12 +12V

■ **CN3 : USB 1, USB2 Connector**

USB1		USB2	
Pin #	Signal	Pin #	Signal
1	USBVCC	1	USBVCC
2	Data-	2	Data-
3	Data+	3	Data+
4	GND	4	GND

■ **CN4 : RJ-45 Ethernet & USB Connector**

Pin #	Signal	Pin #	Signal
1	TD+	2	TD-
3	RO+	4	NC
5	NC	6	RO-
7	NC	8	NC
1	USBVCC	1	USBVCC
2	Data-	2	Data-
3	Data+	3	Data+
4	GND	4	GND

■ **CN5,CN6 : Internal USB Connector**

USB1		USB2	
Pin #	Signal	Pin #	Signal
1	USBVCC	2	USBVCC
3	Data-	4	Data-
5	Data+	6	Data+
7	GND	8	GND
9	key	10	NC

■ **CN7 :** Cache Drawer Connector

Pin #	Signal	Pin #	Signal
1	Cache Drawer GND	2	Cache Drawer OUT1
3	Cache Drawer Input	4	Cache Drawer GND
5	Cache Drawer OUT1	6	Cache Drawer GND

■ **CN8 :** Front Panel Function Connector

Pin #	Signal	Pin #	Signal
1	HDD LED +	2	POWER LED +
3	HDD LED -	4	POWER LED -
5	IR POWER	6	POWER BUTTON +
7	KEY	8	POWER BUTTON -
9	IR RX	10	GND
11	IR GND	12	H/W RESET +

13 IR TX 14 H/W RESET -

■ **CN10 :** Internal Speaker Connecot

Pin #	Signal
1	Speaker L-
2	Speaker L+
3	Speaker R-
4	Speaker R+

■ **INV1 : LCD Inverter Connector**

Pin #	Signal
1	Backlight ADJ
2	GND
3	Backlight Enable
4	12V

■ **LCD1 : LCD Connector**

Pin #	Signal	Pin #	Signal
1	YAOM	2	YAOP
3	YA1M	4	YA1P
5	YA2M	6	YA2P
7	GND	8	CLKAM
9	CLKAP	10	YA3M
11	YA3P	12	YBOM
13	YBOP	14	GND
15	YB1M	16	YB1P
17	GND	18	YB2M
19	YB2P	20	CLKBM
21	CLKBP	22	YB3M
23	YB3P	24	GND
25	VCC3	26	VCC3
27	VCC3	28	VCC
29	VCC	30	VCC

■ IDE1 : PATA Connector For CD-ROM

The PC940 provides one sets of 40-pin IDE connectors. The built-in high speed PCI IDE controller supports both PIO and ATA 100 mode. Up to two IDE devices can be connected, including large hard disks, CD-ROM drives and ATAPI devices. Their corresponding pin assignments are listed below **:**

Pin #	Signal	Pin #	Signal
1	RESET#	2	GND
3	DATA 7	4	DATA 8
5	DATA 6	6	DATA 9
7	DATA 5	8	DATA10
9	DATA 4	10	DATA11
11	DATA 3	12	DATA12
13	DATA 2	14	DATA13
15	DATA 1	16	DATA14
17	DATA 0	18	DATA15
19	GND	20	NC
21	IDEREQ	22	GND
23	IOW#	24	GND
25	IOR#	26	GND
27	ICHRDY#	28	GND
29	DACK	30	GND
31	IDEIRQ	32	NC
33	A1	34	LID
35	A0	36	A2
37	IDECS0	38	IDECS1
39	HDD LED	40	GND

■ SATA1,3 : SATA Connector

The PC940 has an integrated SATA host controller that supports independent DMA operation on four ports and supports data transfer rates of up to 3.0Gb/s (300 MB/s). Their corresponding pin assignments are listed below **:**

Pin #	Signal
1	GND
2	TXP
3	TXN
4	GND
5	RXP
6	RXN
7	GND

■ **COM1 (DB-9)**

Pin #	Signal	Pin #	Signal
1	DCD	6	DSR
2	RXD	7	RTS
3	TXD	8	CTS
4	DTR	9	RI (+5V/12V)
5	GND		

■ **LPT1 : D-SUB-25 Parallel Port**

Pin #	Signal	Pin #	Signal
1	STRB#	14	AFD#
2	DATA 0	15	ERROR*
3	DATA 1	16	INIT#
4	DATA 2	17	SLINT#
5	DATA 3	18	GND
6	DATA 4	19	GND
7	DATA 5	20	GND
8	DATA 6	21	GND
9	DATA 7	22	GND

■ **VGA1 : VGA (D-SUB 15 Pin)**

Pin #	Signal	Pin #	Signal	Pin #	Signal
1	Red	6	GND	11	NC
2	Green	7	GND	12	DDC DATA
3	Blue	8	GND	13	Hsync
4	NC	9	NC	14	Vsync
5	GND	10	GND	15	DDCCLK

■ **COM2 is a RS-232, 422 or 485, selected via BIOS setup.**

Pin #	Signal	Pin #	Signal
1	DCD/422TX-	2	DSR
3	RXD/422TX+	4	RTS
5	TXD/422RX+	6	CTS
7	DTR/422RX-	8	RI (+5V/12V)
9	GND	10	KEY

■ **COM3,COM4 is an internal RS-232 connector.**

Pin #	Signal	Pin #	Signal
1	DCD	2	DSR
3	RXD	4	RTS
5	TXD	6	CTS
7	DTR	8	RI(+5V/12V)
9	GND	10	key

■ **FAN 1~3 : FAN Connector**

Pin #	Signal

1	GND
2	+12V
3	FAN SPEED DECECT

■ **PCI1 : PCI Expansion Slot**

The PC940 provides a PCI slot. By plugging a riser card, it can support up to 2 PCI devices.

Pin #	Signal	Pin #	Signal
Al	TRST#	Bl	+12V
A2	+12V	B2	TCK
A3	TMS	B3	GND
A4	TDI	B4	NC
A5	+5V	B5	+5V
A6	INTB#	B6	+5V
A7	INTD#	B7	INTC#
A8	+5V	B8	INTA#
A9	NC	B9	PRSNT1#
A10	+5V	BIO	PREQ1#
All	PGNT1#	Bll	PRSNT2#
A12	GND	B12	GND
A13	GND	B13	GND
A14	VCC3 DUAL	B14	PCICLK2
A15	RST#	B15	GND
A16	+5V	B16	PCICLK1
A17	PGNT0#	B17	GND
A18	GND	B18	PREQ0#
A19	PME#	B19	+5V
A20	AD30	B20	AD31
A21	VCC3	B21	AD29
A22	AD28	B22	GND
A23	AD26	B23	AD27
A24	GND	B24	AD25
A25	AD24	B25	VCC3
A26	IDSEL (AD31)	B26	CBE3#
A27	VCC3	B27	AD23
A28	AD22	B28	GND
A29	AD20	B29	AD21

A30	GND	B30	AD19
A31	AD18	B31	VCC3
A32	AD16	B32	AD17
A33	VCC3	B33	CBE2#
A34	FRAME*	B34	GND
A35	GND	B35	IRDY#
A36	TRDY#	B36	VCC3
A37	GND	B37	DEVSEL#
A38	STOP#	B38	GND
A39	VCC3	B39	PLOCK#
A40	SD0NE1	B40	PERR#
A41	SB01#	B41	VCC3
A42	GND	B42	SERR#
A43	PAR	B43	VCC3
A44	AD15	B44	CBE1#
A45	VCC3	B45	AD14
A46	AD13	B46	GND
A47	AD11	B47	AD12
A48	GND	B48	AD10
A49	AD9	B49	GND
A50	KEY	B50	KEY
A51	KEY	B51	KEY
A52	CBE0#	B52	AD8
A53	VCC3	B53	AD7
A54	AD6	B54	VCC3
A55	AD4	B55	AD5
A56	GND	B56	AD3
A57	AD2	B57	GND
A58	ADO	B58	AD1
A59	+5V	B59	+5V
A60	REQ64#	B60	ACK64#
A61	+5V	B61	+5V

5.2. AWARD BIOS SETUP

The BIOS (Basic Input and Output System) Setup Utility displays the system's configuration status and provides options to set system parameters. The parameters are stored in battery-backed-up CMOS RAM that saves this information even when the power is turned off. When the system is turned back on, the system is configured with the values found in CMOS. This chapter describes how to set up BIOS configuration.

5.2.1. AWARD BIOS

The BIOS Setup Utility enables you to configure the following items **:**

- Hard drives, diskette drives, and peripherals
- Video display type and display options
- Password protection from unauthorized use
- Power management features

- This Setup Utility should be used for the following **:**
- The system is staring for the first time.
- The hardware devices attached to the systems have been changed
- The CMOS memory has lost power and the configuration information has been erased.
- When a configuration error is detected and you are prompted to make changes to the Setup Utility
- When trying to resolve IRQ conflicts
- When making changes to the Power Management configuration
- When changing the User or Supervisor password

The BIOS setup program is stored in ROM, which can be accessed by pressing <DEL> key on the keyboard immediately when the system is powered on.

In order to retain the specified setup information when the system power is turned off, the system setup information is stored in a battery-backed CMOS RAM. The battery is to ensure the settings will not be erased when the computer is turned off or reset. When the computer is powered on again, the system will read the settings stored in the CMOS RAM and compare them to the equipment check conducted during the power on self test (POST). If any error or mismatch occurs, an error message will be shown on the screen and the computer will be prompted to run the setup program.

Control Key Definition

The BIOS navigation keys are listed below.

↑	Move to previous item
↓	Move to next item
←	Move to the item in the left hand
→	Move to the item in the right hand
Esc	Main Menu - Quit and not save changes into CMOS Status Page Setup Menu and Option Page Setup Menu -Exit current page and return to Main Menu
PgUp	Increase the numeric value or make changes
PgDn	Decrease the numeric value or make changes
F1	General help, only for Status Page Setup Menu and Option Page Setup Menu
F5	Restore the previous CMOS value from CMOS, only for Option Page Setup Menu
F6	Load the default CMOS value from BIOS default table, only for Option Page Setup Menu
F7	Load the default
F10	Save all the CMOS changes, only for Main Menu

5.2.2. AWARD BIOS SETUP MAIN MENU

The on-line description of the highlighted setup function is displayed at the bottom of the screen.

Press <F1> to pop up a small help window that describes the appropriate keys to use and the possible selections for the highlighted item. To exit the Help Window, press <ESC>.

AWARD BIOS Setup

Entering the Setup Utility

When you power on the system, BIOS enters the Power-On Self Test (POST) routines. POST is a series of built-in diagnostics performed by the BIOS. After the POST routines are completed, the following message appears **:**

Press DEL to enter SETUP

Press the delete key <Delete> to access the Award BIOS Setup Utility. The setup main menu will appear on the screen. The main menu of the Setup Utility displays a list of the options that are available. A highlight indicates which option is currently selected. Use the cursor arrow keys to move the highlight to other options. When an option is highlighted, execute the option by pressing <Enter>.

Some options lead to pop-up dialog boxes that prompt you to verify that you wish to execute that option. Other options lead to dialog boxes that prompt you for information.

Some options (marked with a triangle ►■) lead to submenus that enable you to change the values for the option. Use the cursor arrow keys to scroll through the items in the submenu.

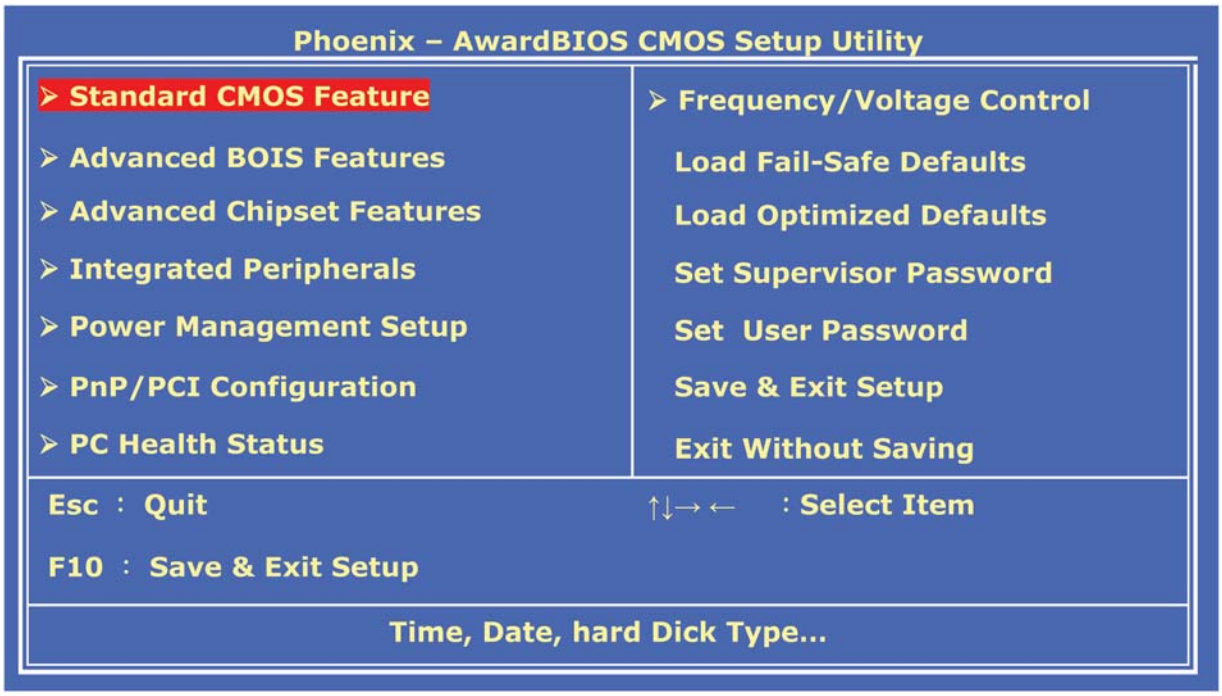

The following lists the functions of the items on the BIOS main menu. **Standard CMOS Setup :** This setup page includes all the items in standard compatible BIOS.

- **Advanced BIOS Features :** This setup page includes all the items of Award special enhanced features.
- **Advanced Chipset Features :** This setup page includes all the items of the chipset special features.
- **Integrated Peripherals :** This setup page includes all onboard peripherals.
- **Power Management Setup :** This setup page includes all the items of Green function features.
- **PnP/PCI Configuration :** This setup page includes all the configurations of PCI & PnP ISA resources.
- **PC Health Status :** This setup page auto detects the temperature, voltage and fan speed.
- **Frequency/Voltage Contro**l **:** This setup page includes the CPU/DDR/PCI frequency setting.
- **Load Fail-Safe Defaults :** BIOS Defaults indicates the most appropriate value of the system parameters that the system would be in safe configuration.
- **Load Optimized Defaults :** Setup Defaults indicates the value of the system parameters that the system would be in the best performance configuration.
- **Set Supervisor Password:** The supervisor's password can be set or changed or disabled in this setup page. It allows you to limit access to the system and setup, or just to setup.
- **Set User Password :** The user's password can be set or changed or disabled in this setup page. It allows you to limit access to the system and setup, or just to setup.
- **Save & Exit Setup :** Save CMOS value settings to CMOS and exit setup.
- **Exit without Saving :** Abandon all CMOS value changes and exit setup.

5.2.3. STANDARD CMOS FEATURES

Selecting **Standard CMOS Features** on the main menu displays the following menu. This menu allows the user to configure the system components such as date, time, hard disk drive, floppy disk drive and display type.

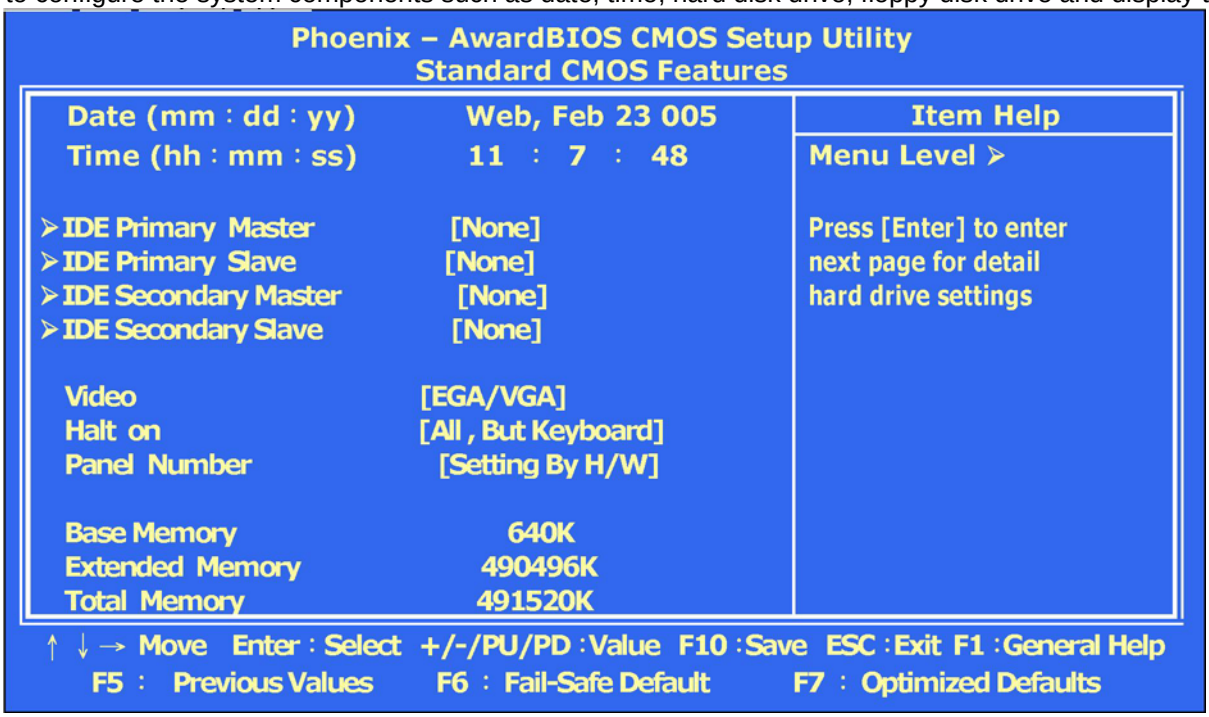

- **Date**

The **Date** item show the current date held by the system. If you are running a Windows OS, these items are automatically updated whenever you make changes to the Windows Date Properties utility.

The date format is <day>, <month>, <date>, <year>.

day	The day, from Sun to Sat, determined by the BIOS and is display-only
month	The month, Jan. through Dec.
date	The date, from 1 to 31 (or the maximum allowed in the month)
year	The year, from 1994 through 2079

- **Time**

The **Time** item show the current time held system. If you are running a Windows OS, these items are automatically updated whenever you make changes to the Windows Time Properties utility.

The times format in <hour> <minute> <second>. The time is calculated base on the 24-hour military-time clock. For example, 1 p.m. is 13 **:** 00 **:** 00.

■ **Primary HDDs/Secondary HDDs**

This field is used to configure the IDE hard drive installed in the system. Move the cursor to highlight the IDE Primary/Secondary Master/Slave fields and press <Enter>. The IDE Primary Master submenu opens **:**

IDE HDD Auto-Detection

Press <**Enter**> while this item is highlighted if you want the Setup Utility to automatically detect and configure a hard disk drive on the IDE channel.

IDE Primary/Secondary Master/Slave

If you leave this item at Auto, the system will automatically detect and configure any IDE devices it finds. If it fails to find a hard disk, change the value to Manual and then manually configure the drive by entering the characteristics of the drive in the fields described below **:**

* **Capacity** - displays the capacity of the HDD in megabytes (MB).
* **Cylinder** - indicates the number of cylinders that the HDD has. A cylinder is the sum total of all tracks that are in the same location on every disk surface.
* **Head** - displays the number of heads in the HDD. A head is a device that reads and writes data on the hard disk.
* **Precomp** - displays the track where precompensation is initiated. Precompensation is a feature whereby the HDD uses a stronger magnetic field to write data in sectors that are closer to the center of the disk. In CAV recording, in which the disk spins at a constant speed, the sectors closest to the spindle are packed tighter than the outer sectors.
* **Landing Zone** - displays the location of the safe non-data area on a hard disk that is used for parking the read/write head.
* **Sector** - displays the number of sectors available on the HDD. A sector is the smallest unit of storage space on a disk.

If no hard disk is installed, select NONE and press <Enter>.

■ **Drive A type/Drive B type**

The item identifies the types of floppy disk drive A or drive B that has been installed in the computer.

None	No floppy drive installed
360K, 5.25"	5.25 inch PC-type standard drive; 360K byte
1.2M, 5.25"	5.25 inch AT-type high-density drive; 1.2M bytes (3.5 inch when 3 Mode is Enabled).
720K, 3.5"	3.5 inch double-sided drive; 720K byte
1.44M, 3.5"	3.5 inch double-sided drive; 1.44M byte
2.88M, 3.5"	3.5 inch double-sided drive; 2.88M byte

■ **Video**

This item defines the video mode of the system. This main board has a built-in VGA graphics system; you must leave this item at the default setting.

■ **Halt on**

This item defines the operation of the system POST (Power On Self Test) routine. You can use this item to select which types of errors in the POST are sufficient to halt the system.

■ **Panel Number**

The item selects the panel resolution and LVDS interface for single or dual.

■ **Base Memory, Extended Memory and Total Memory**

These items are automatically detected by the system at start up time. These are display-only fields. You cannot make changes to these fields.

* **Base Memory** - This field displays the amount of conventional memory detected by the system during boot.
* **Extended Memory** - This field displays the amount of extended memory detected by the system during boot.
* **Total Memory** - This field displays the total amount of memory (Base and Extended) detected by the system during boot.

5.2.4. ADVANCED BIOS FEATURES

Selecting Advanced BIOS Features on the main menu displays this following menu.

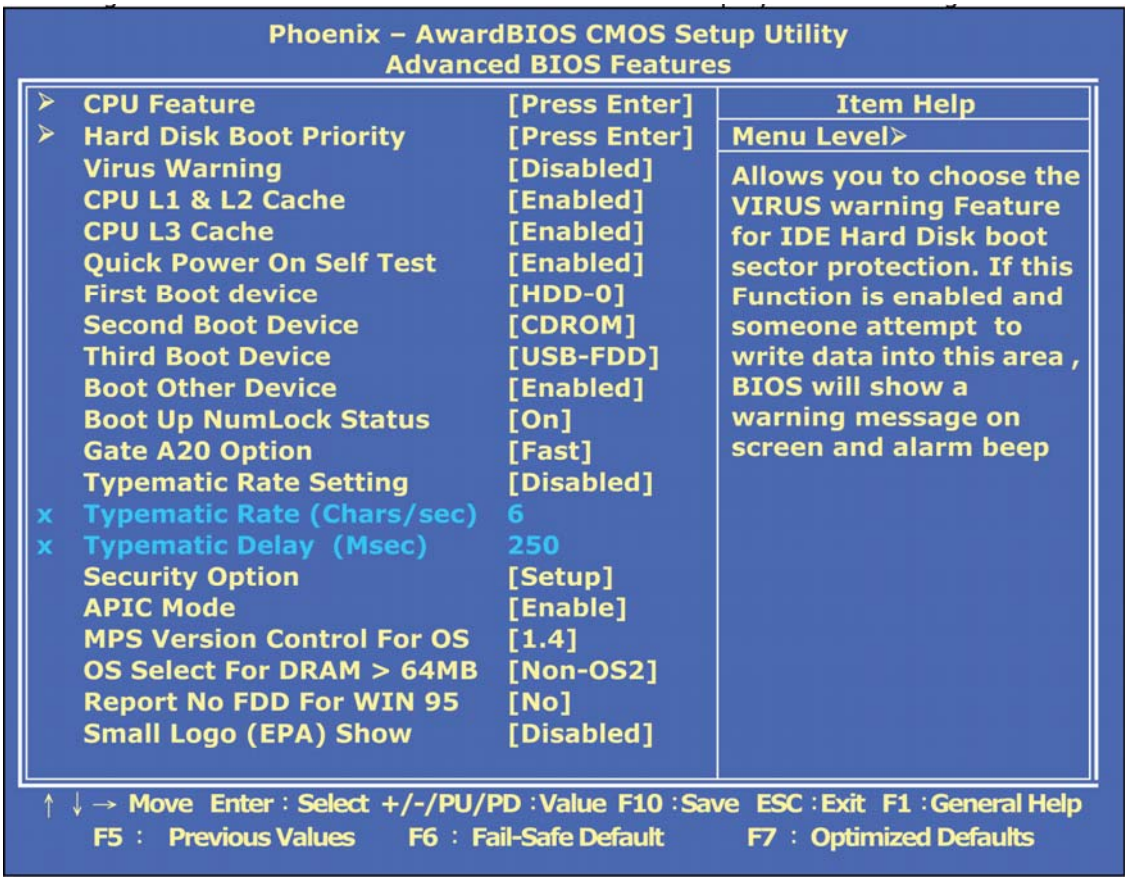

- **CPU Feature**

Setting the CPU thermal management mode

- **Hard Disk Boot Priority** Select Hard

Disk Boot Device Priority

- **Virus Warning**

When enabled, this item provides protection against viruses that try to write to the boot sector and partition table of the hard disk drive. You need to disable this item when installing an operating system. We recommend that you enable anti-virus protection as soon as you have installed an operating system.

Enabled **:** activates automatically when the system boots up causing a warning message to appear when anything attempts to access the boot sector or hard disk partition table. Disabled **:** no warning message will appear when anything attempts to access the boot sector or hard disk partition table.

- **CPU L1 & L2 Cache**

All processors that can be installed in this main board use internal level 1 (L1) and external level 2 (L2) cache memory. These two items speed up memory access. However, it still depends on CPU/chipset design. Leave this item at the default setting for better performance.

Enabled **:** enables cache

Disabled **:** disable cache

- **CPU L1 & L2 Cache**

If the processors have support L3 cache . This item speed up memory access. However, it still depends on CPU/chipset design. Leave this item at the default setting for better performance.

- **Quick Power On Self Test**

This category speeds up Power on Self Test (POST) after you power up the computer. If it is set to Enable, BIOS will shorten or skip some check items during POST.

Enabled **:** enables quick POST

Disabled **:** normal POST

- **First/Second/Third/Boot Device**

The BIOS attempts to load the operating system from the devices in the sequence selected in these items.

- **Boot Other Device**

When enabled, the system searches all other possible locations for an operating system if it fails to find one in the devices specified under the First, Second, and Third boot devices.

- **Boot Up NumLock Status**

This item defines if the keyboard Num Lock key is active when the system is started.

- **Gate A20 Option**

This item defines how the system handles legacy software that was written for an earlier generation of processors. Leave this item at the default setting.

- **Typematic Rate Setting**

If this item is enabled, you can use the following two items to set the typematic rate and the typematic delay settings for the keyboard.

- **Typematic Rate (Chars/Sec)**

Use this item to define how many characters per second are generated by a held-down key.

- **Typematic Delay (Msec)**

Use this item to define how many milliseconds must elapse before a held-down key begins generating repeat characters.

- **Security Option**

If you have installed password protection, this item defines if the password is required at system start up, or if it is only required when a user tries to enter the Setup Utility.

- **APIC Mode**

Enable or Disable APIC(Advanced Programmable Interrupt Controller) mode

- **MPS Version Control For OS**

This option is only valid for multiprocessor motherboards as it specifies the version of the Multiprocessor Specification (MPS) that the motherboard will use. The MPS is a specification by which PC manufacturers design and build Intel architecture systems with two or more processors.

MPS version 1.4 added extended configuration tables to improve support for multiple PCI bus configurations and improve future expandability. It is also required for a secondary PCI bus to work without the need for a bridge. Newer versions of server operating systems will generally support MPS 1.4 and as such, you should change the BIOS Setup from the default of 1.1 to 1.4 if your operating system supports version 1.4. Leave it as 1.1 only if you are running older server OSes.

- **OS Select For DRAM > 64MB**

This item is only required if you have installed more than 64 MB of memory and you are running the OS/2 operating system. Otherwise, leave this item at the default.

- **Report No FDD For Win 95**

If you are using Windows 95/98 without a floppy disk drive, select Enabled to release IRQ6. This is required to pass Windows 95/98's SCT test. You should also disable the Onboard FDC Controller in the Integrated Peripherals screen when there's no floppy drive in the system. If you set this feature to Disabled, the BIOS will not report the missing floppy drive to Win95/98.

- **Small Logo (EPA)Show**

This item determines whether the EPA logo is to appear during boot up.

5.2.5. ADVANCED CHIPSET FEATURES

Selecting Advanced Chipset Features on the main menu displays this following menu.

This option displays critical timing parameters of the main board. Leave the items on this menu at their default settings unless you are very familiar with the technical specifications of the system hardware. If you change the values incorrectly, you may introduce fatal errors or recurring instability into the system.

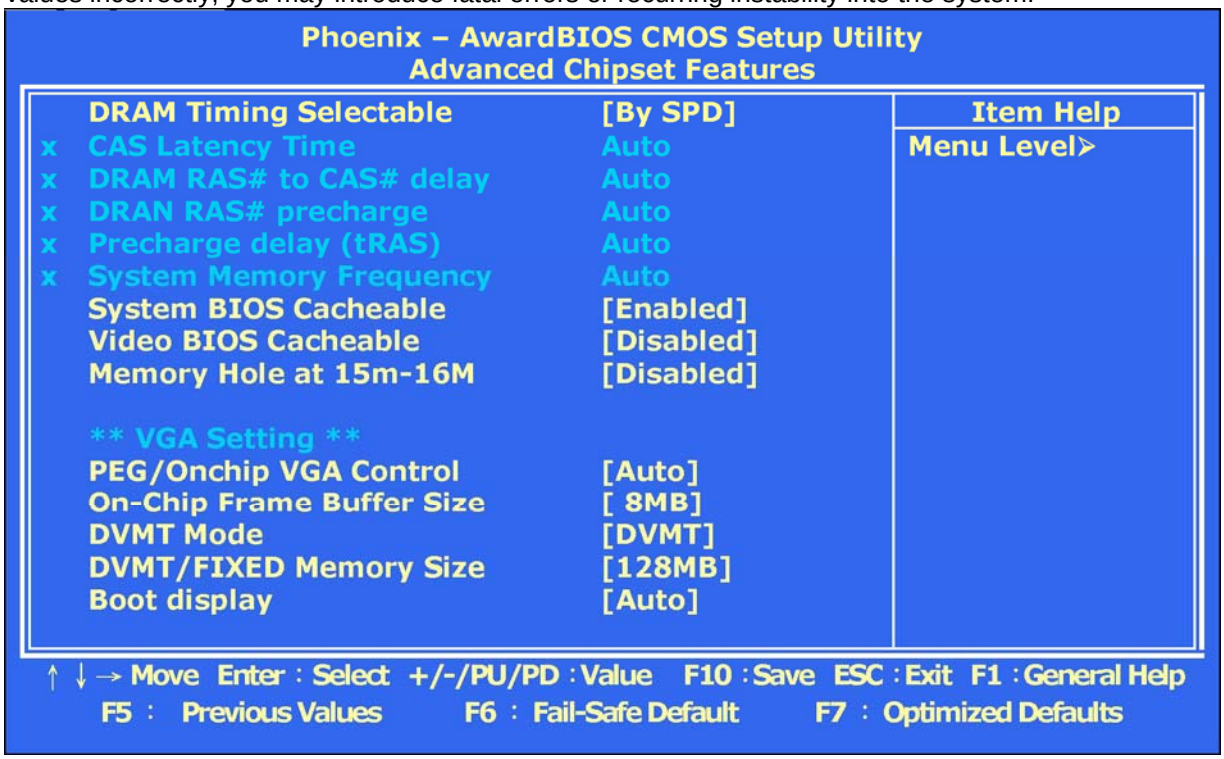

- **DRAM Timing Selectable**

Menu setting the DRAM time

- **System BIOS Cacheable :**

Selecting Enabled allows caching of the system BIOS ROM at F0000h-FFFFFh, resulting in better system performance.

However, if any program writes to this memory area, a system error may result.

The options are Enabled or Disabled.

- **Video BIOS Cacheable**

Selecting Enabled allows caching of the Video RAM, resulting in better system performance. However, if any program writes to this memory area, a system error may result.

The options are Enabled or Disabled.

- **Memory Hole at 15M-16M :**

You can reserve this area of system memory for ISA adapter ROM. When this area is reserved, it cannot be cached. The user information of peripherals that need to use this area of system memory usually discusses their memory requirements.

- **PEG/OnChip VGA Control**

This item is to enable or disable the onboard VGA function

- **On-Chip Frame Buffer Size**

This item is to set buffer size

The options are 1M.4M.8M.16M or 32M

- **DVMT Mode**

This item is to select the DVMT mode

- **DVMT/FIXED Memory Size**

This item is to set DVMT/FIXED mode memory size

The options are 64MB/128MB/224MB

- **Boot Display**

This item is to select the boot display from VBIOS Default or CRT,LCD

5.2.6. Integrated Peripherals

5.2.6.1. OnChip IDE Device

If the OnChip IDE Device option is selected from the Integrated Peripherals menu, the screen below will appear.

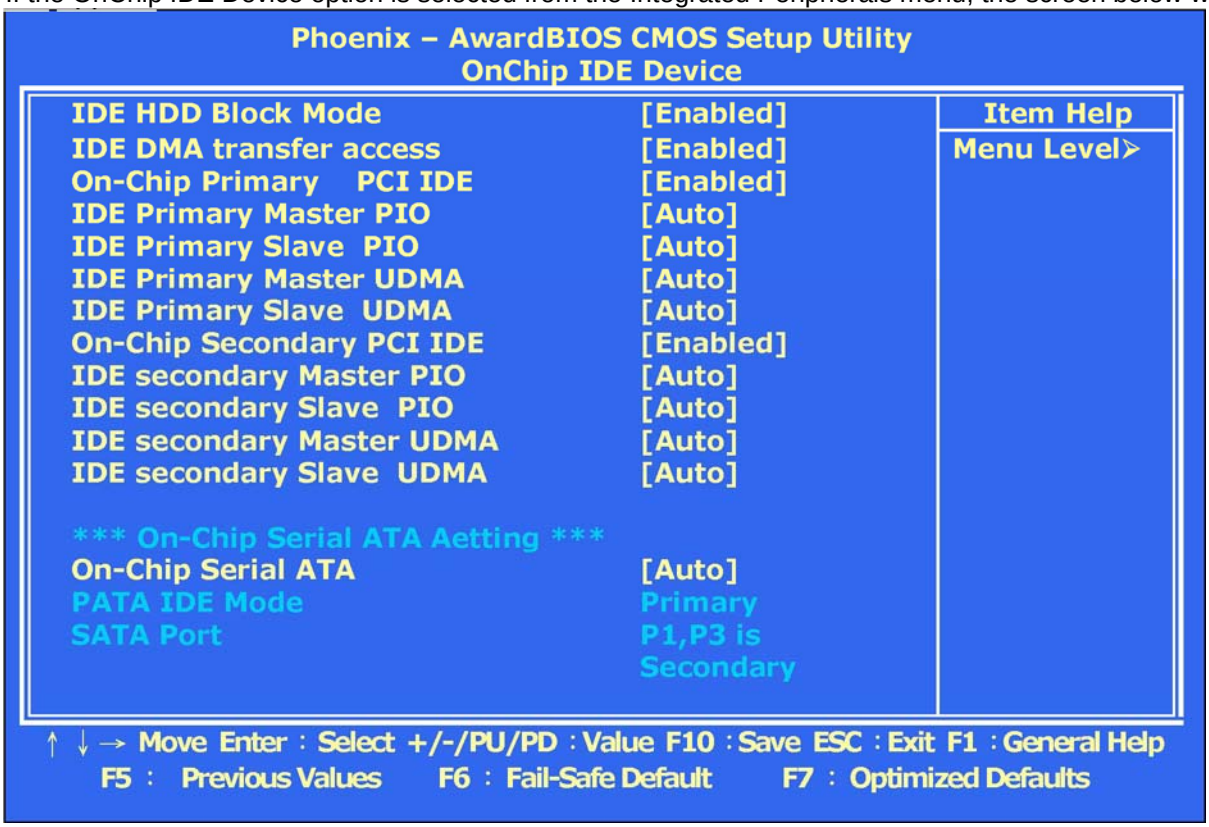

- **IDE HDD Block Mode :**

Block mode is also called block transfer, multiple commands, or multiple sector read/write. If your IDE hard drive supports block mode (most new drives do), select Enabled for automatic detection of the optimal number of block read/write per sector the drive can support.

The options are Enabled or Disabled.

- **IDE DMA transfer access :**

The item is to select the IDE DMA mode The

options are Enabled or Disabled.

- **On-Chip Primary & Secondary PCI/IDE**

This option enables you to activate/inactivate the Primary & Secondary IDE channel of the motherboard's onboard IDE controller. You should leave this enabled if you are using this onboard IDE channel. Disabling it will prevent the IDE devices attached to this channel from functioning at all.

- **IDE Primary Master/Slave PIO**

The four IDE PIO (Programmed Input/ Output) fields let you set a PIO mode (0-4) for each of the four IDE devices that the onboard IDE interface supports. Modes 0 through 4 provide successively increased performance. In Auto mode, the system automatically determines the best mode for each device.

The options are Auto, Mode 0, Mode 1, Mode 2, Mode 3 or Mode 4.

- **Primary Master/Slave UltraDMA**

UDMA (Ultra DMA) is a DMA data transfer protocol that utilizes ATA commands and the ATA bus to allow DMA commands to transfer data at a maximum burst rate of 100MB/s. When you select Auto in the four IDE UDMA fields (for interface supports), the system automatically determines the optimal data transfer rate for each IDE device.

The options are Auto or Disabled.

- **On-Chip Serial ATA :**

The item is to setting the On-Chip SATA Function

5.2.6.2. ONCHIP DEVICE

If the OnChip Device option is selected from the Integrated Peripherals menu, the screen below will appear.

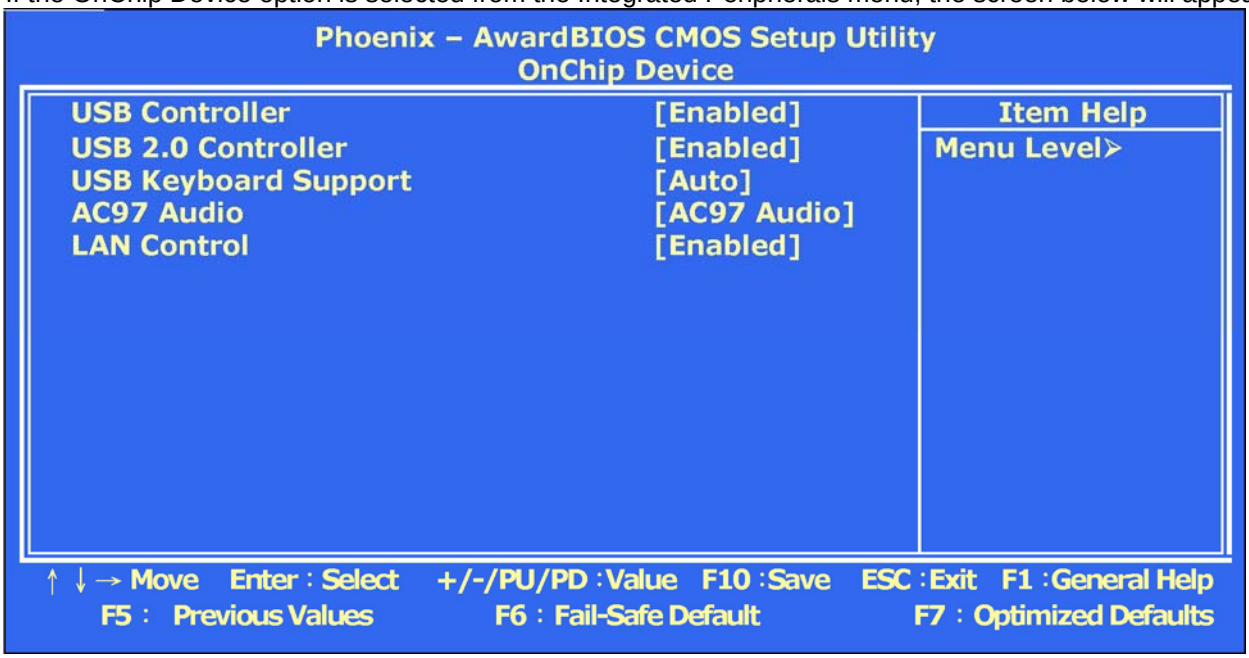

- **USB Controller**

This function is similar to Assign IRQ For USB. It enables or disables IRQ allocation for the USB (Universal Serial Bus). Enable this if you are using a USB device. If you disable this while using a USB device, you may have problems running that device. However, if you don't use any USB devices, set the option to Disabled. It will free up an IRQ for other devices to use.

- **USB 2.0 Controller**

This item is for disable/enable EHCI controller only, Support the high speed USB device. The options are Enabled or Disabled.

- **USB Keyboard Support**

Select Enabled if your system contains a Universal Serial Bus (USB) controller and you have a USB keyboard. The options are Enabled or Disabled.

- **AC97 Audio**

Select Auto to support AC97 Audio. The options are AC97 Audio or Disabled.

- **Onboard LAN Function**

The item can enable or disable the onboard Ethernet controller

5.2.6.3. SUPERIO DEVICE

If the SuperIO Device option is selected from the Integrated Peripherals menu, the screen below will appear.

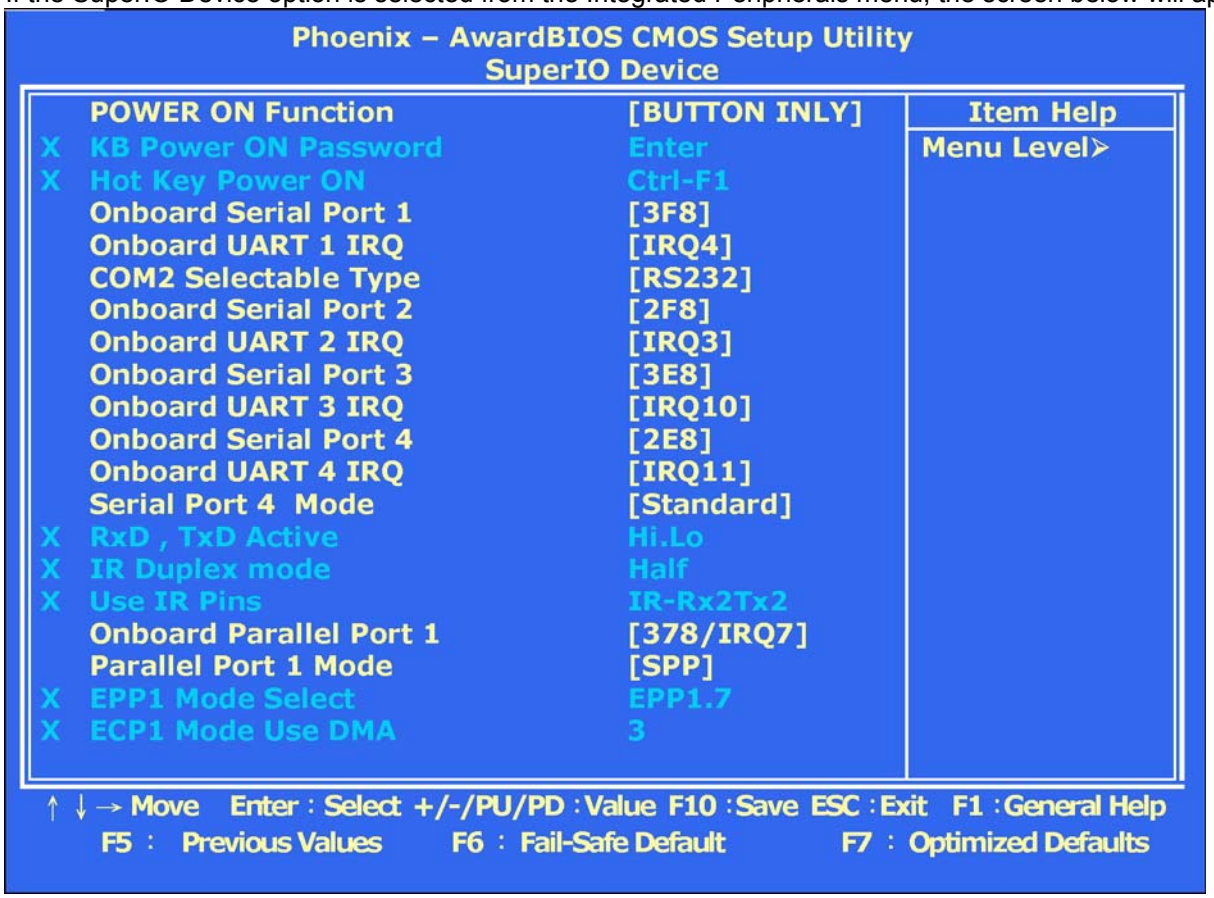

- **Power On Function**

This function allows you to set the method by which your system can be turned on. Normally, it should be set as Button Only so that your system will only start up if you use the button/switch on the casing. Other alternative options including starting up the system using the keyboard (if it supports the Keyboard 98 standard), a keyboard hot key (for other standard keyboards) or the mouse.

- **KB Power On Password**

This item can be used to prompt a password when the system power is resumed by keyboard action.

- **Hot Key Power On**

This item can be used to prompt a hot key when the system power is resumed by keyboard action.

- **Onboard Serial Port 1/Port 2/Port 3/Port 4** This item

is to select an address for the serial ports. The options are

3F8/2F8/3E8/2E8, Disabled.

- **Onboard UART 1/ UART 2/ UART 3/ UART 4 IRQ** This item is to

select an IRQ for the serial ports.

The options are IRQ4/IRQ3/IRQ10/IRQ11/IRQ9/IRQ5,

- **COM2 Selectable type :**

This item is to select the COM2 port type The

options are RS232/RS422/RS485.

- **Onboard Parallel Port 1 :**

This item allows you to determine the onboard parallel port controller's I/O address and parallel port mode.

The options are 378/IRQ7, 278/IRQ5, 3BC/IRQ7, Disable.

The options are SPP, EPP, ECP, ECP+EPP, Normal

5.2.7. POWER MANAGEMENT SETUP

Selecting Power Management Setup on the main menu displays the following menu.

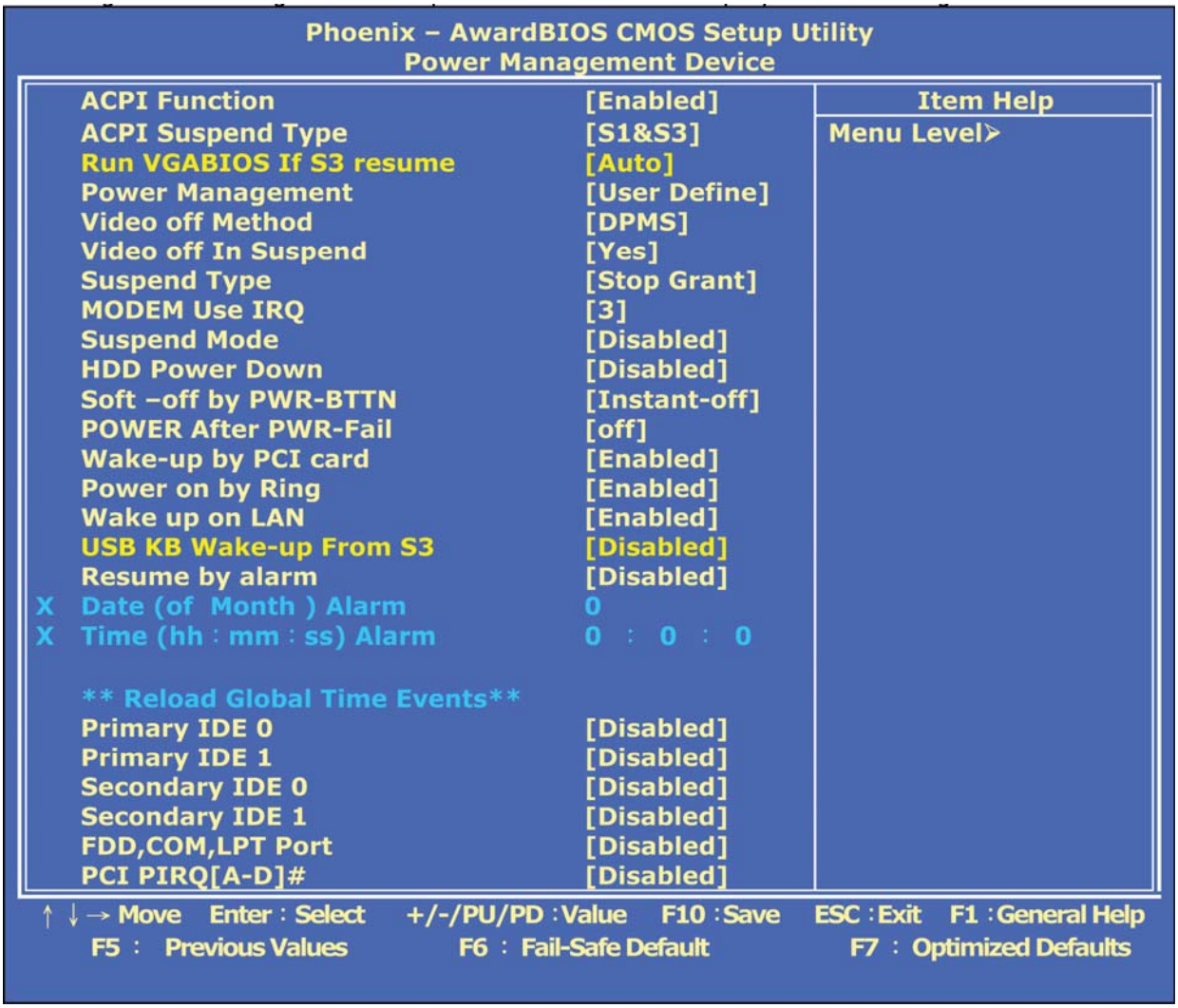

- **ACPI Function**

This item allows the user to select the ACPI (Advanced Configuration and Power Interface) function. The options are Enable & Disable

- **ACPI Suspend Type**

This item allows the user to select the ACPI suspend type The
options are S1,S3 or S1&S3

- **Power Management**

Power Management mode setting is to select the wake-up device.

Video Off Method

This item defines how the video is powered down to save power. The default setting is DPMS Mode.

- **Video Off in Suspend**

This option defines if the video is powered down when the system is put into suspend mode. The default setting is Suspend -> Off.

- **Suspend Type**

If this item is set to the default Stop Grant, the CPU will go into Idle Mode during power saving mode.

- **MODEM Use IRQ**

If you want an incoming call on a modem to automatically resume the system from a power-saving mode, use this item to specify the interrupt request line (IRQ) that is used by the modem. You might

have to connect the fax/modem to the main board Wake On Modem connector for this feature to work.
The default setting is 3.

■ **Suspend Mode**

The CPU clock will be stopped and the video signal will be suspended if no Power Management events occur for a specified length of time. Full power function will return when a Power Management event is detected. Options are from 1 Min to 1 Hour and Disabled. The default setting is Disabled.

■ **HDD Power Down**

The IDE hard drive will spin down if it is not accessed within a specified length of time. Options are from 1 Min to 15 Min and Disabled. The default setting is 15 Min.

■ **Soft-Off by PWR-BTN**

Under ACPI (Advanced Configuration and Power management Interface) you can create a software power down. In a software power down, the system can be resumed by Wake Up Alarms. This item lets you install a software power down that is controlled by the normal power button on your system. If the item is set to Instant-Off, then the power button causes a software power down. If the item is set to Delay 4 Sec, you have to hold the power button down for four seconds to cause a software power down. The default setting is Instant-Off.

■ **Wake-Up by PCI card**

Use this item to enable PCI activity to wake up the system from a power-saving mode. The default setting is Disabled.

■ **Power On by Ring**

Use this item to enable modem activity to wakeup the system from a power saving mode.

■ **USB KB Wake-Up From S3**

Use this item to enable USB Keyboard activity to wakeup the system from a power saving mode.

■ **Wake up on LAN**

Use this item to enable LAN activity to wake up the system from a power-saving mode. The default setting is Disabled.

■ **USB KB Wake-up from S3**

When enabled, the system power will resume the system from a power saving mode if there is any USB keyboard activity.

■ **Resume by Alarm**

When set to Enabled, the following two fields become available and you can set the date (day of the month), hour, minute and second to turn on your system. When set to 0 (zero) for the day of the month, the alarm will power on your system every day at the specified time. The default setting is Disabled.

■ **Date (of Month) Alarm**

When set to “0” the system powers on everyday at the time specified in the “Time (hh**:** mm**:** ss) Alarm” field.
Select a date from 1 to 31 for the system to power on at the time specified in the “Time (hh **:** mm **:** ss) Alarm” field.
The default setting is 0.

■ **Time (hh : mm : ss) Alarm**

Set the time for the system to power on as defined in the ‘Date (of Month) Alarm” field.

**** Reload Global Timer Events ****

Global Timer (power management) events are I/O events whose occurrence can prevent the system from entering a power saving mode or can awaken the system from such a mode. In effect, the system remains alert for anything that occurs to a device that is configured as Enabled, even when the system is in a power-down mode.

■ **Primary/Secondary IDE 0/1**

When these items are enabled, the system will restart the power-saving timeout counters when any activity is detected on any of the drives or devices on the primary or secondary IDE channels.

■ **FDD, COM, LPT Port**

When this item is enabled, the system will restart the power-saving timeout counters when any activity is detected on the floppy disk drive, serial ports, or the parallel port. The default setting is Disabled.

■ **PCI PIRQ [A-D] #**

When disabled, any PCI device set as the Master will not power on the system. The default setting is Disabled.

Press <Esc> to return to the main menu.

5.2.8. PnP/PCI Configuration

Selecting PnP/PCI Configuration on the main menu displays the following menu.

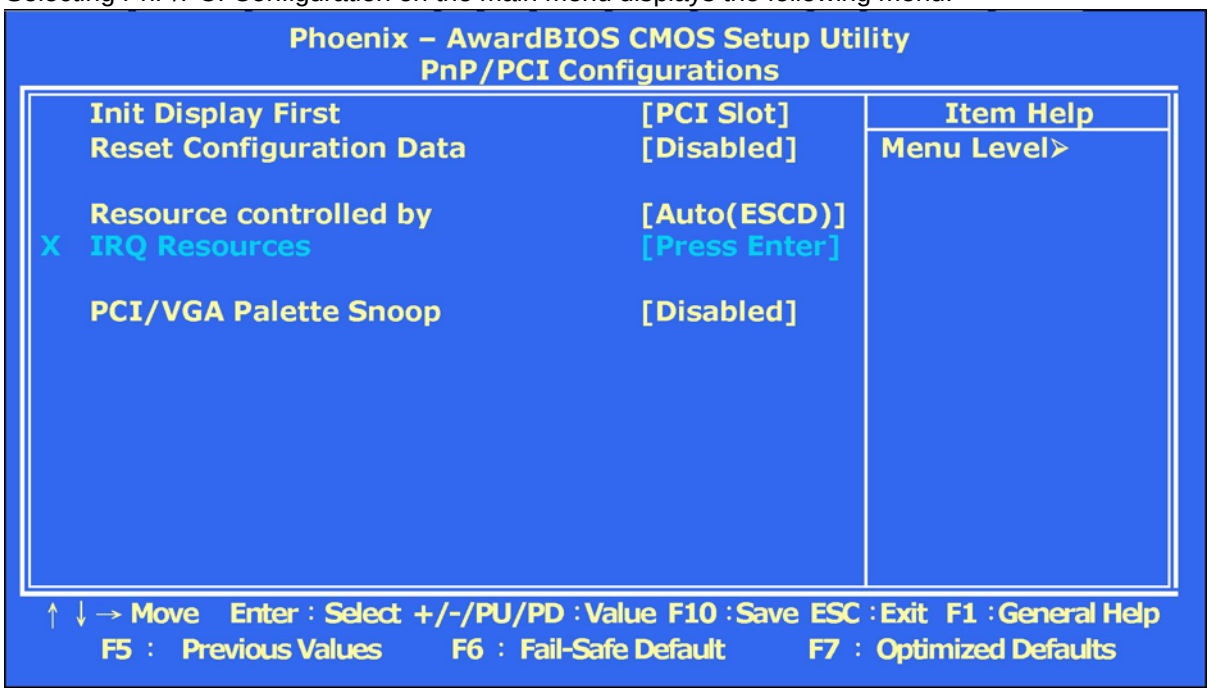

■ Init Display First

This item allows you to decide to active which Display controller first by PCI slot or Onboard. The options are PCI Slot or Onboard

■ Reset Configuration Data

Normally, you leave this field Disabled. Select Enabled to reset Extended System Configuration Data (ESCD) when you exit Setup if you have installed a new add-on and the system reconfiguration has caused such a serious conflict that the operating system can not boot.

The options are Enabled or Disabled.

■ Resource controlled by

The Award Plug and Play BIOS has the capacity to automatically configure the boot and Plug and Play compatible devices.

However, this capability means absolutely nothing unless you are using a Plug and Play operating system such as Windows 95. If you set this field to “manual” choose specific resources by going into each of the sub menu that follows this field (a sub menu is preceded by a “ ”).

The options are Auto (ESCD), Manual.

■ IRQ Resources

When resources are controlled manually, assign each system interrupt a type, depending on the type of device using the interrupt.

IRQ3/4/5/7/9/10/11/12/14/15 assigned to

This item allows you to determine the IRQ assigned to the ISA bus and is not available to any PCI slot. Legacy ISA is for devices compliant with the original PC AT bus specification. PCI/ISA PnP is for devices compliant with the Plug and Play standard whether designed for PCI or ISA bus architecture.

The options are PCI Device or Reserved.

■ PCI/VGA Palette Snoop

This option is only useful if you use an MPEG card or an add-on card that makes use of the graphics card's Feature Connector. It corrects incorrect colour reproduction by "snooping" into the graphics card's framebuffer memory and modifying (synchronizing) the information delivered from the graphics card's Feature Connector to the MPEG or add-on card. It will also solve the problem of display inversion to a black screen after using the MPEG card.

5.2.9. PC HEALTH STATUS

Selecting PC Health Status on the main menu displays the following menu. This option auto detects the system's temperature, voltage and fan speed.

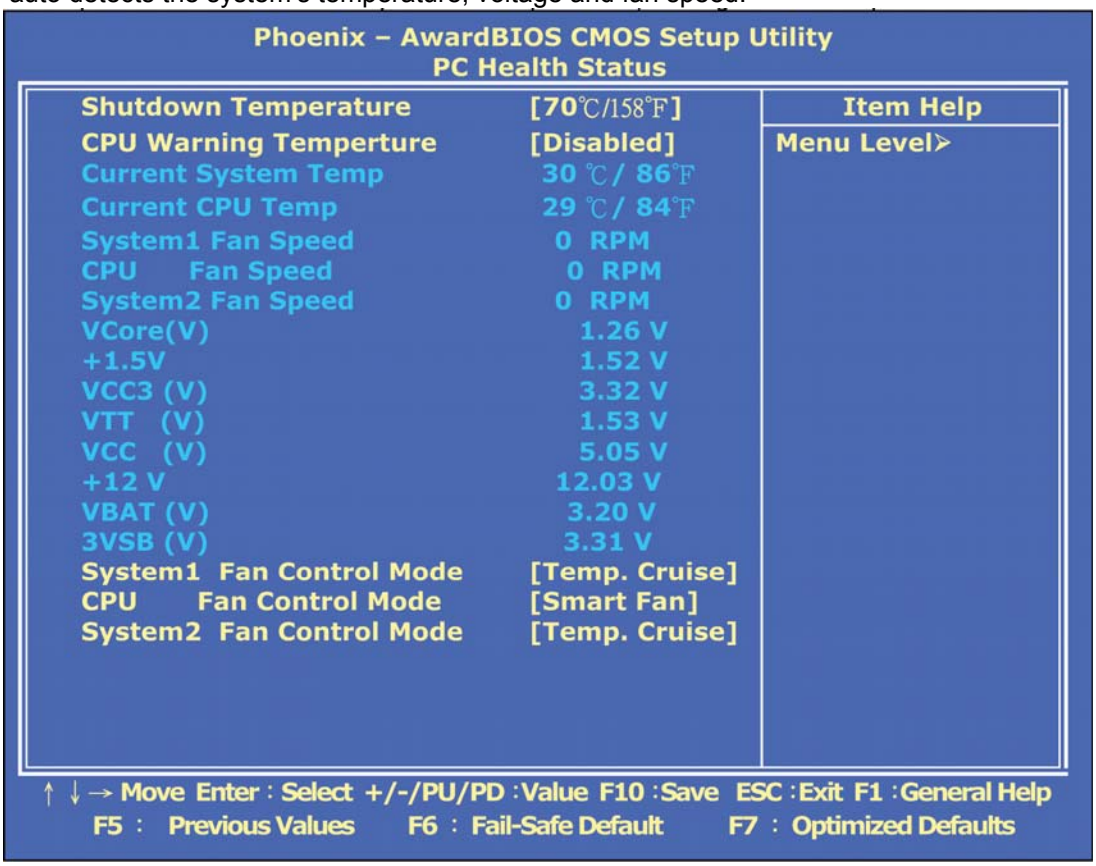

- **Shutdown Temperature**

This item allows you to select System shutdown temperature.
The options are 60oC/140 oF, 65 oC /149 oF, 70 oC/158 oF or Disabled.

- **CPU Warning Temperature**

This item allows you to select CPU Warning temperature. The options are 50oC/122 oF~, 70 oC/158 oF or Disabled.

- **System1 Fan Control Mode** This item is to select Fan control mode The options are Temp. Cruise or Disabled.

- **CPU Fan Control Mode**

This item is to select Fan control mode
The options are Temp. Cruise, Smart fan or Disabled.

- **System2 Fan Control Mode**

This item is to select Fan control mode
The options are Temp. Cruise or Disabled.

5.2.10. Frequency Voltage Control

This setup page is for the CPU, SDRAM and PCI frequency setting.

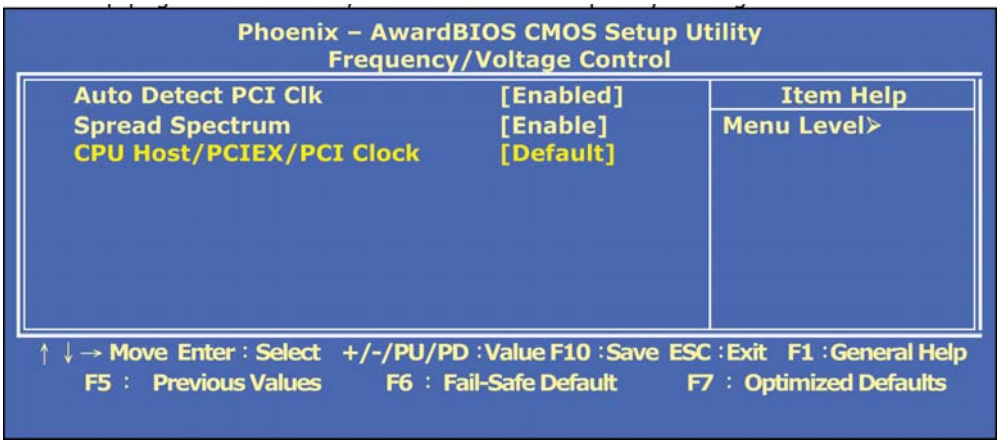

- **Auto Detect PCI Clk**

This item allows you to select auto detect PCI Clock. The options are Enabled or Disabled.

- **Spread Spectrum**

This item allows you to Enabled/Disabled the spread spectrum modulate. The options are Enabled or Disabled.

- **CPU Host/PCIEX/PCI Clock**

This item allows you to select CPU frequency.

5.2.11. LOAD FAIL-SAFE DEFAULTS

The default values of the Load Fail-Safe Defaults indicate the most appropriate value of the system parameters that the system would be in safe configuration.

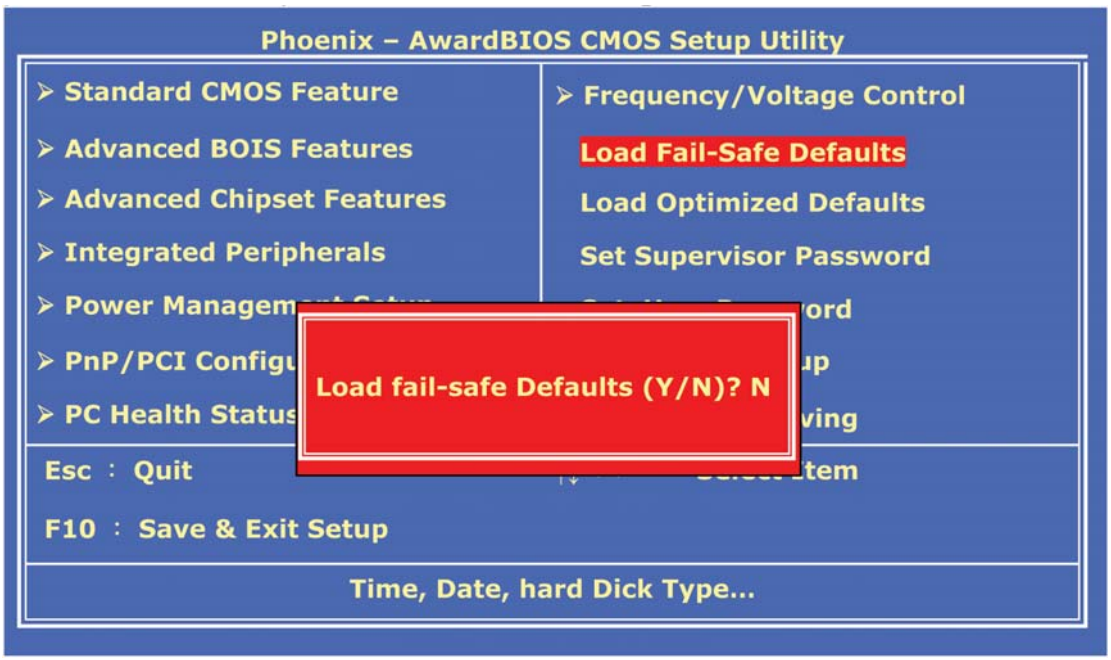

5.2.12. Load Optimized Defaults

The default values of the Load Optimized Defaults indicate the most appropriate value of the system parameters that the system would be in best performance configuration.

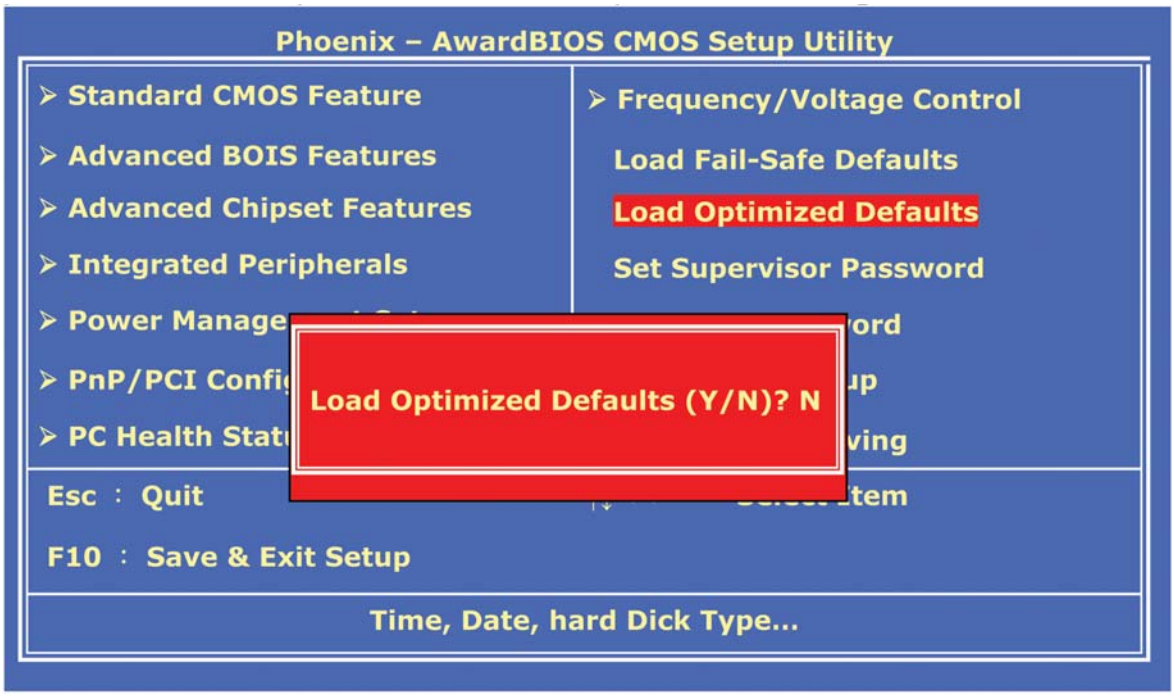

5.2.13. User Password

The USER PASSWORD is used to set the password. To change the password, select this option from the main menu and press <Enter>.

If the CMOS does not work properly or the USER PASSWORD option is selected for the first time, then a default password is stored in the ROM. The following message will appear on the screen;

Enter Password

Press <Enter>.

If the CMOS is working properly or the USER PASSWORD option is selected to change the default password, then the current password (the ROM password or the use-defined password) stored in the ROM needs to be entered first. The following message will appear on the screen;

Confirm Password

Enter the current password and press <Enter>.

After pressing <Enter>, then the new password (8 characters at most) can be entered now. The new password will be stored in the CMOS.

Please note that to enable this option, either **Setup** or **System** is to be selected from the **ADVANCED BIOS FEATRUES** first.

5.2.14. Save and Exit Setup

If the Save & Exit Setup option is selected, the values entered the setup utilities will be saved in the chipset's CMOS memory. When the system is turned on every time, the CPU will check the CMOS to compare the CMOS data to see whether it matches the system. These data are very important for the system operation.

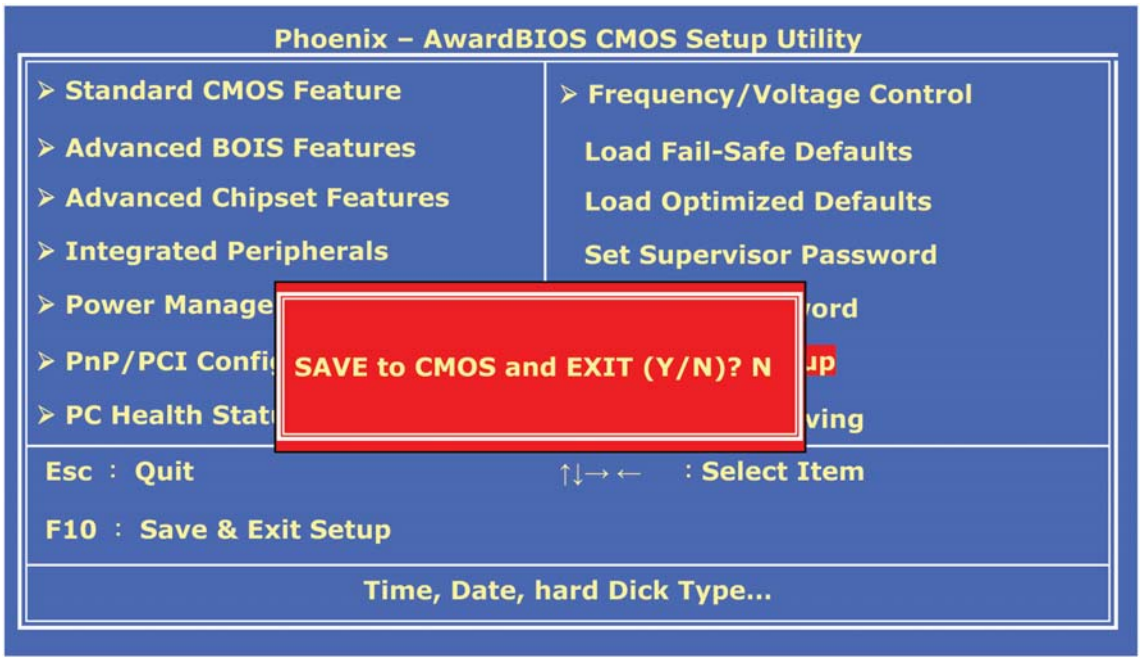

5.2.15. Exit Without Saving

If the Exit Without Saving option is selected and <ENTER> is pressed, you will exit the Setup program without saving any new values. The CMOS will still keep the old values.